ISO 9001 CERTIFIED

502-MT-MS-01

SERVICE MANUAL
AND
REPAIR PARTS
FOR
Model 2.5 Posidyne MULTI-SPEED DRIVE (MSDr)

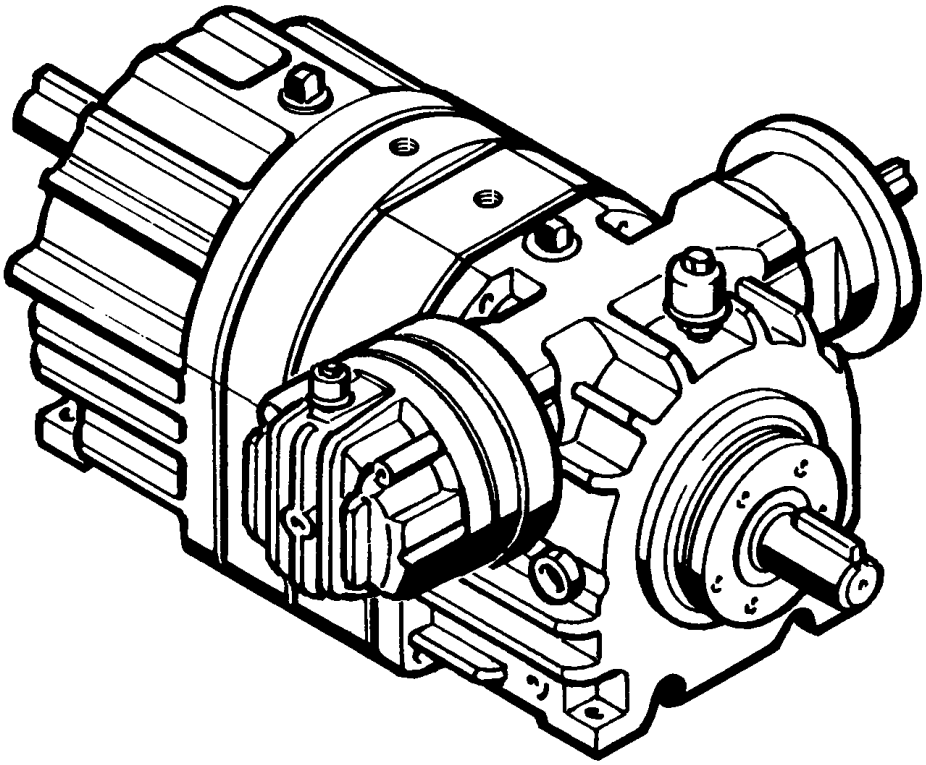

WARNING - Read this manual before any installation, maintenance and operation.

FORCE CONTROL®

FORCE CONTROL INDUSTRIES, INC.

MANUFACTURERS OF MECHANICAL AND ELECTRICAL POWER TRANSMISSION EQUIPMENT

INDUSTRIAL MAGZA® DIST. AUTORIZADO MEX (55) 53 63 23 31 MTY (81) 83 54 10 18 QRO (442) 1 95 72 60 ventas@industrialmagza.com

LIMITED WARRANTY

SPECIAL 24 MONTH WARRANTY

Upon written approval of the application by Force Control Industries, Inc. the Standard Warranty period will be extended to 24 months.

Force Control Industries, Inc. ("Force Control") warrants its products to be free from defects in material and workmanship under normal and proper use for a period of one year from the date of shipment. Any products purchased from Force Control that upon inspection at Force Control's factory prove to be defective as a result of normal use during the one year period will be repaired or replaced (at Force Controls'option) without any charge for parts or labor. This limited warranty shall be void in regard to (1) any product or part thereof which has been altered or repaired by a buyer without Force Control's previous written consent or (2) any product or part thereof that has been subjected to unusual electrical, physical or mechanical stress, or upon which the original identification marks have been removed or altered. Transportation charges for shipping any product or part thereof that the buyer claims is covered by this limited warranty shall be paid by the buyer. If Force Control determines that any product or part thereof should be repaired or replaced under the terms of this limited warranty it will pay for shipping the repaired or replaced product or part thereof back to the buyer. EXCEPT FOR THE EXPRESS WARRANTY SET OUTABOVE, FORCE CONTROL DOES NOT GRANTANY WARRANTIES EITHER EXPRESSED OR IMPLIED, INCLUDING IMPLIED WARRANTIES OF MERCHANTABILITY OR FITNESS FOR USE. The warranty obligation set forth above is in lieu of all obligations or liabilities of Force Control for any damages. Force Control specifically shall not be liable for any costs incurred by the buyer in disconnecting or re-installing any product or part thereof repaired or replace under the limited warranty set out above. FORCE CONTROL EXPRESSLY EXCLUDES ALL LIABILITY FOR ANY INDIRECT OR CONSEQUENTIAL DAMAGES THE BUYER MAY SUSTAIN IN CONNECTION WITH THE DELIVERY, USE, OR PERFORMANCE OF FORCE CONTROL PRODUCTS. Under no circumstances shall any liability for which Force Control is held responsible exceed the selling price to the buyer of the Force Control products that are proven to be defective. This limited warranty may be modified only in writing signed by a duly authorized officer of the company. This limited warranty applies exclusively to Force Control products; warranties for motors and gear reducers and other component parts may be provided by their respective manufactures. Any legal action for breach of any Force Control warranty must be commenced within one year of the date on which the breach is or should have been discovered.

A Return Goods Authorization (RGA) number must be obtained from the factory and clearly marked on the outside of the package before any equipment will be accepted for warranty work. Force Control will pay the shipping costs of returning the owner parts that are covered by warranty.

Force Control believes that the information in this document is accurate. The document has been carefully reviewed for technical accuracy. In the event that technical or typographical errors exist, Force Control reserves the right to make changes to subsequent editions of this document without prior notice to holders of this edition. The reader should consult Force Control if errors are suspected. In no event shall Force Control be liable for any damages arising out of or related to this document or the information contained in it.

INDUSTRIAL MAGZA® DIST. AUTORIZADO MEX (55) 53 63 23 31 MTY (81) 83 54 10 18 QRO (442) 1 95 72 60 ventas@industrialmagza.com

Table Of Contents

Section 1 - DESCRIPTION and OPERATION

1-1 UNIT DESCRIPTION (MSDr) 1
1-2 THE OIL SHEAR PRINCIPLE 1
1-3 DESCRIPTION OF CLUTCH AND BRAKE STACKS 1
1-4 OPERATION 2

Section 2 - SPECIFICATIONS

2-1 OPERATING SPECIFICATIONS 3
2-2 OVERHUNG LOAD CAPACITY 3
2-3 PRESSURE Vs. TORQUE CHART 3

Section 3 - INSTALLATION

3-1 RECEIVING THE DRIVE 4
3-2 MOUNTING THE DRIVE 4
3-3 WIRING SPECIFICATIONS 5
3-4 PNEUMATICS 5
3-5 START UP 5

Section 4 - LUBRICATION

4-1 CHECKING THE OIL LEVEL 6
4-2 CHANGING THE OIL 6
4-3 TYPE OF OIL 6

Section 5 - OPERATIONAL CHECKS

5-1 GENERAL SET-UP INSTRUCTIONS 7
5-2 CHECKING CLUTCH AND BRAKE PISTON
SEALS AND MOVEMENT 7
5-3 CHECKING CLUTCH AND BRAKE ENGAGEMENT or
INPUT SHAFT Vs.OUTPUT SHAFT ROTATION 7
5-4 DRIVE MOTORS 8
5-5 PNEUMATIC CONTROL 8

Section 6 - TROUBLESHOOTING

6-1 TROUBLESHOOTING CHART 9
6-2 REMEDIES 10

Section 7 - DISASSEMBLY

7-1 GENERAL DISASSEMBLY PROCEDURE 11
7-2 REMOVING C-FACE MOUNTED DRIVE MOTORS 11
7-3 REMOVING FAN SHROUD AND FAN 11
7-4 SEPARATION AND REMOVAL OF MAJOR SUB-ASSEMBLIES
FOR ACCESS TO THE CLUTCH AND BRAKE STACKS 11
7-5 REMOVAL OF HEAT EXCHANGER 12

DISASSEMBLY OF MAJOR SUB-ASSEMBLIES

7-6 PRIMARY INPUT HOUSING SUB-ASSEMBLY
(WITH MALE INPUT SHAFT) 12
7-7 REMOVING THE MALE PRIMARY INPUT SHAFT
FROM THE PRIMARY INPUT HOUSING 13
7-8 PRIMARY INPUT HOUSING SUB-ASSEMBLY
(WITH QUILL INPUT SHAFT) 13
7-9 PRIMARY PISTON RETAINER AND HOUSING
SUB-ASSEMBLY 13
7-10 BRAKE SUB-ASSEMBLY 14
7-11 SECONDARY INPUT HOUSING SUB-ASSEMBLY
(WITH MALE INPUT SHAFT) 15
7-12 SECONDARY INPUT HOUSING SUB-ASSEMBLY
(WITH QUILL INPUT SHAFT) 16
7-13 SECONDARY INPUT SHAFT SUB-ASSEMBLY 17
7-14 REMOVING THE OUTPUT SHAFT FROM
THE OUTPUT HOUSING 18

Section 8 - CLEANING and INSPECTION

8-1 CLEANING AND INSPECTION 19
8-2 REPAIR AND REPLACEMENT 19

Section 9 - REASSEMBLY

9-1 GENERAL REASSEMBLY INSTRUCTIONS 20

REASSEMBLY OF MAJOR SUB-ASSEMBLIES

9-2 INSTALLING BEARINGS ON OUTPUT SHAFT 20
9-3 OUTPUT HOUSING SUB-ASSEMBLY 20
9-4 WORM GEAR SUB-ASSEMBLY 20
9-5 SECONDARY INPUT HOUSING SUB-ASSEMBLY
(WITH MALE INPUT WORM SHAFT) 21
9-6 SECONDARY INPUT HOUSING SUB-ASSEMBLY
(WITH QUILL INPUT WORM SHAFT) 22
9-7 MB-056 BRAKE SUB-ASSEMBLY 23
9-8 PISTON RETAINER AND HOUSING SUB-ASSEMBLY 24
9-9 PRIMARY INPUT HOUSING SUB-ASSEMBLY
WITH MALE INPUT SHAFT 24
9-10 PRIMARY INPUT HOUSING SUB-ASSEMBLY
(WITH QUILL INPUT SHAFT) 25
9-11 INSTALLING WATER COOLED HEAT EXCHANGER 25
9-12 REASSEMBLY OF MAJOR SUB-ASSEMBLIES
AND CLUTCH STACKS 25
9-13 FAN AND FAN SHROUD INSTALLATION 26
9-14 ATTACHING C-FACE MOUNTED DRIVE MOTORS
(WITH QUILL INPUT SHAFT) 26
9-15 ATTACHING C-FACE MOUNTED SECONDARY
CLUTCH DRIVE MOTOR WITH COUPLING 26
9-16 INSTALLING BELT DRIVEN SHEAVE OR PULLEY 27
9-17 FINAL REASSEMBLY 27

Section 10 - ORDERING REPAIR PARTS

I0-1 GENERAL INFORMATION 28
10-2 FACTORY RE-BUILD SERVICE 28
10-3 DRIVE MOTORS 28
10-4 ORDERING REPAIR PARTS 28
10-5 NAME PLATE AND MODEL NUMBER 28
MULTI-SPEED (MSDr) MODEL NUMBER INFORMATION 29

MAJOR SUB-ASSEMBLIES & CLUTCH STACKS *(Figure 10.1)* 31

PRIMARY INPUT HOUSING SUB-ASSEMBLY *(Figure 10.2)* 33

FAN COOLING and WATER COOLING *(Figure 10.3)* 35

PISTON RETAINER and HOUSINGS
SUB-ASSEMBLY *(Figure 10.4)* 37

MB-056 MOTOR BRAKE SUB-ASSEMBLY *(Figure 10.5)* 39

SECONDARY INPUT and OUTPUT HOUSING SUB-ASSEMBLY
(Secondary Input Shaft and Output Shaft) *(Figure 10.6)* 41

SECONDARY INPUT and OUTPUT HOUSING SUB-ASSEMBLY
(Secondary Input Worm Shaft) *(Figure 10.7)* 43

INDUSTRIAL MAGZA® DIST. AUTORIZADO MEX (55) 53 63 23 31 MTY (81) 83 54 10 18 QRO (442) 1 95 72 60 ventas@industrialmagza.com

Section 1
DESCRIPTION AND OPERATION

1-1 UNIT DESCRIPTION (MSDr)

The Multi-Speed Drive, as shown in *Figure I.I*, consists of a Primary Input Shaft, Secondary Input Worm Shaft and Output Shaft. Both the Primary Input Shaft and the Secondary Input Shaft can be a Male Shaft or a Quill Shaft. The Male Input Shaft is either belt driven or directly coupled to the Drive Motor. The Quill Input Shaft enables the drive motor to be C-Face Mounted directly to the Clutch/Brake Unit *(Figure 1.1)*. The Secondary Input C-Face is also available with a male shaft and coupling for down shifting applications.

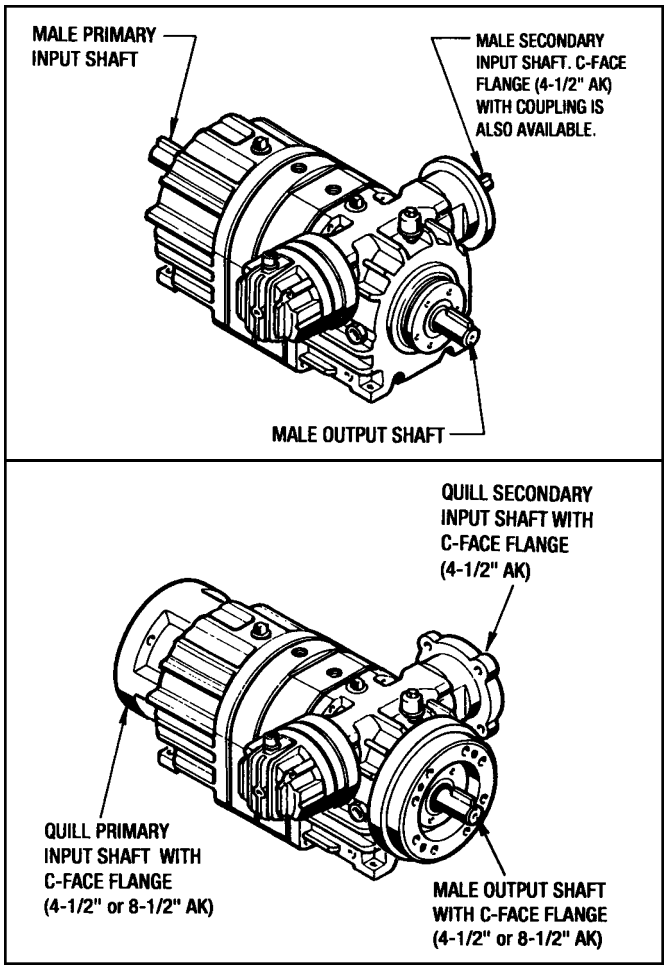

Figure 1.1 - Drive Unit Configurations

1-2 THE OIL SHEAR PRINCIPLE

Conventional clutches and brakes depend on friction between solid surfaces operating in air to transmit torque.

Friction does the job, but produces a great amount of heat and wear. The MSDr uses the friction surfaces operating in a continually replenished, re-circulating supply of oil. The oil molecules tend to cling to each other and to the friction surfaces. As moving and stationary elements are brought together, a thin but positive film of oil is maintained between them, controlled by the clamping pressure and carefully designed grooves in the elements. Torque is transmitted from one element to the other through the viscous shear of the oil film. So long as there is relative motion between the elements, they are protected by the oil, thus greatly reducing wear. The oil also effectively transmits heat away from the friction elements.

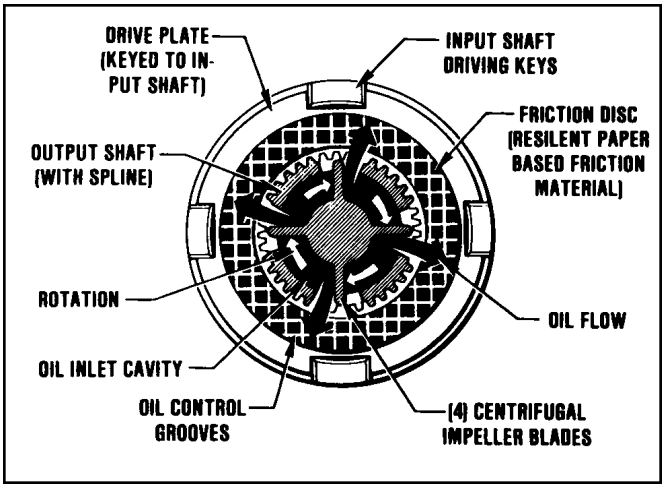

Figure 1.2 - The "Oil Shear Principle"

1-3 DESCRIPTION OF CLUTCH AND BRAKE STACKS

In the MSDr clutch and brake stacks, the friction surfaces consist of alternate carbon steel drive plates and friction discs. The friction discs consist of a resilient paper based friction material bonded to steel discs with oil control grooves machined into the friction surfaces. *(See Figure 1.2)*. The friction discs have internal teeth which mate with a spline on the output shaft. The drive plates are keyed to the input shafts in the clutches and to the housing for the brake. The splined sections of the output shaft contains centrifugal impellers to maintain a positive flow of oil between the friction discs and the drive plates maintaining the ***"Oil Shear Principle"*** as described in 1-2.

INDUSTRIAL MAGZA® DIST. AUTORIZADO MEX (55) 53 63 23 31 MTY (81) 83 54 10 18 QRO (442) 1 95 72 60 ventas@industrialmagza.com

1-4 OPERATION

The MSDr Assembly *(Figure 1.3)* shows the drive in the braked, or stopped position. The spring set MB-056 brake on the secondary input shaft keeps it from rotating. Springs push the piston in the piston housing against the secondary clutch stack to transmit the brake torque to the output shaft. There is an optional air boost (Port B), using compressed air, for increased and adjustable brake torque. (S and SA Logic only).

The primary input shaft can run continuously. Air is applied to port A to engage the primary clutch. The piston shifts away from the secondary clutch and engages the primary clutch.The primary shaft is now connected to the output shaft.

The secondary input shaft can only run when the brake is released. Air is applied to port C to release the brake. The secondary motor may now be started. The secondary clutch must be engaged for the secondary input shaft to drive the output shaft. Air is exhausted from port A to disengage the primary clutch and engage the secondary F clutch. Air is applied to port B to further increase the secondary clutch torque (S and SA Logic only).The secondary input shaft is now connected to the output shaft.

A typical application would be to engage the primary clutch to drive a load at high speed. Then downshift to the secondary clutch to travel at a low speed. The low speed may be to position a load very accurately, or a feed speed in a machining operation. The secondary motor is turned off and the brake is engaged to stop in the final position.

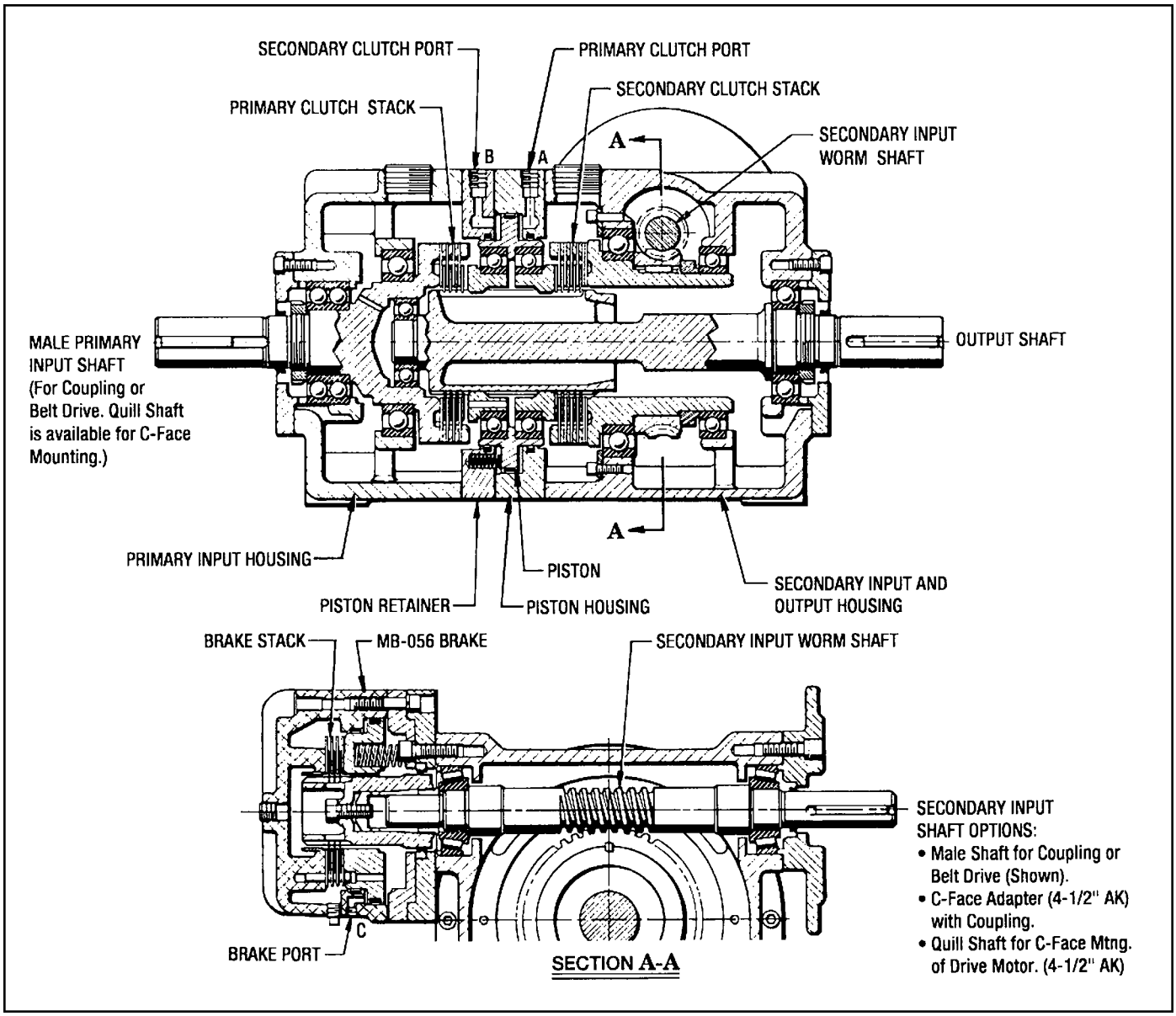

Figure 1.3 - Multi-Speed Drive Assembly

INDUSTRIAL MAGZA® DIST. AUTORIZADO MEX (55) 53 63 23 31 MTY (81) 83 54 10 18 QRO (442) 1 95 72 60 ventas@industrialmagza.com

Section 2
SPECIFICATIONS

2-1 OPERATING SPECIFICATIONS

SIZE	LOGIC	PRIMARY CLUTCH TORQUE *(Lb. Ins.)*		SECONDARY CLUTCH AND BRAKE TORQUE *(Lb. Ins.)*				MAXIMUM RPM		MAX. KE per ENGMT *(Ft. Lbs.)*	AVERAGE THERMAL H.P.			AIR VOL per ENGMT *(Cu. In.)*	OIL CAP. *(Oz.)*	INERTIA OF CYCLIC PARTS *(Lb.Ft.^{2})*
		STATIC @ PSIG	DYNAMIC @ PSIG	SPRINGS ONLY		MAX. AIR ASSIST		BASIC & FAN COOL	WATER COOL		COOLING					
				STATIC	DYN.	STATIC	DYN.				BASIC	FAN	WATE			
2.5	S	1118 @ 60	966 @ 60	120	104	1400 @ 60	1200 @ 60	1800	3600	7500	HORIZONTAL 0.70 | 2.00 | 4.00 ---------- VERTICAL .35 | 1.00 | 2.00			5	6	.20
	SA	1189 @ 80	1027 @ 80	457	395	1554 @ 40	1343 @40									
	A	1227 @ 80	1060 @ 80	432	373	-------	------									
	B	749 @80	647 @ 80	862	745	------	------									
	C	1057 @ 60	913 @ 60	0	0	------	--------									

*** NOTE:** Cooling water flow requirements in GPM equals .10 x calculated thermal horsepower load.

2-2 OVERHUNG LOAD CAPACITY *(Lbs. Pull)*

SIZE	INPUT SHAFT *(RPM)*				OUTPUT SHAFT *(RPM)*		
	PRIMARY			SECONDARY*			
	900	1200	1800	1800	900	1200	1800
2.5	900	800	700	400	1200	1100	1000

NOTES: Ratings are at midpoint of shaft extension.
* - Male Secondary Input Shaft Only.

2-3 PRESSURE Vs. TORQUE CHART

SIZE	LOGIC	PRIMARY CLUTCH				SECONDARY CLUTCH AND BRAKE				
		C_M		C_E	C_T	B_0	B_M		B_S	B_T
		CLUTCH STATIC TORQUE *(Lb. In.)*	MAX. ACTUATION PRESSURE *(PSI)*	CLUTCH ENGAGEMENT AIR PR. *(PSI)*	CLUTCH NET TORQUE *(Lb. In./PSI)*	SPRING SET ONLY TORQUE WITHOUT AIR ASSIST *(Lb. In.)*	STATIC TORQUE *(Lb. In.)*	MAX. BRAKE ACTUATION PRESSURE *(PSI)*	BRAKE SPRING BIAS *(PSI)*	BRAKE NET TORQUE *(Lb. In./PSI)*
2.5	S	1118	@ 60	7.57	21.3	120	1400	@ 60	5.6	21.3
	SA	1189	@ 80	24.25		457	1554	@ 40	16.7	27.4
	A	1227	@ 80	22.46		432	------		15.7	------
	B	749	@ 80	44.85		862	------		31.4	------
	C	1057	@ 60	10.43		------	------		------	------

NOTE: Minimum pressure to release 056 Brake is 60 PSI.

To find Torque developed at a given Actuation Pressure:
- Clutch Torque = (P.S.I. - C_E) x C_T
- Brake Torque = (P.S.I. + B_S) x B_T

To find Actuation Pressure needed for Required Torque:
- Clutch P.S.I. = (T_R / C_T) + C_E
- Brake P.S.I. = (T_R / B_T) - B_S

P.S.I. = Air Pressure @ Posidyne port.
TR = Required Static Torque.

2-4 CONTROL LOGICS:

S - Air set clutch / Light spring set brake with air assist.

SA-Air set clutch / Medium spring set brake with air assist.

A - Air set clutch / Medium spring set brake.

B - Air set clutch / Heavy spring set brake.

C - Air set clutch / No brake.

INDUSTRIAL MAGZA® DIST. AUTORIZADO MEX (55) 53 63 23 31 MTY (81) 83 54 10 18 QRO (442) 1 95 72 60 ventas@industrialmagza.com

Section 3
INSTALLATION

The Multi-Speed Drive Units described in this manual must not be installed or operated at any Speeds, Horsepower, Loads or Temperatures not specified in this manual.

Failure to limit operating conditions of the drive to all specified conditions could damage the Drive Unit and cause damage or malfunction to interconnected equipment and void the warranty.

WARNING:
Before installation or attempting any repairs to the drive, open the electrical disconnects to both drive motors. Shut off the air supply to the drive and lock them out. Also bleed off any remaining air pressure trapped in the pneumatic lines. These steps must be taken to avoid any possibility of personal injury.

3-1 RECEIVING THE DRIVE

Check the drive for shortage or damage immediately after arrival. Prompt reporting to the carrier's agent, with notations made on the freight bill, will expedite satisfactory adjustment by the carrier. When unloading or handling the drive, keep it upright. All Drives are filled with oil, ready to run, when shipped. However, before placing the unit in service or storage, check the oil level to make sure none has spilled out in transit. Add oil if necessary (refer to **Section 4 LUBRICATION**). If the drive is not to be installed and operated soon after arrival, store it in a clean, dry place having a slow, moderate change in ambient temperature. Actuate pistons and rotate shafts once a month to re-lubricate working surfaces.

3-2 MOUNTING THE DRIVE

Installation of the drive should be made in much the same manner, and receive the same care as for a precision gear reducer. Standard drives are designed for horizontal operation. Note the following procedure and precautions when mounting the drive.

1. The Drive should be mounted to a firm, level base or foundation.

   IMPORTANT
   When first mounting the Drive Unit to the base, visually check to see if the Unit is setting flat on the base. If not, use a standard feeler gauge to determine gap thickness and shim under appropriate feet before installing hold-down bolts.

   Use 3/8"x 1-1/4" Lg. SAE grade 5 Hex Hd. Cap Screws, Flat Washers and Lockwashers to bolt the Drive Unit securely in place. Before tightening down the bolts, check alignment with the driven machinery, then recheck after tightening.

2. If the Primary Input Shaft is to be directly coupled, use only a flexible coupling (with horsepower service factor of 3 to 1 to take care of maximum torque requirements). Make sure that the shafts to be coupled are aligned within the coupling manufacturer's specifications. Check for horizontal, vertical or angular misalignment. Use shims as necessary to correct any misalignment. Avoid the use of slipfit coupling bores, they tend to damage keys and keyways over time.

   CAUTION
   Do not drive couplings or bushings onto shafts, as this may damage the bearings.

3. If the Primary Input Shaft is to be connected through a belt, chain or gear drive, locate the sheave, sprocket or gear as close as possible to the drive housing and the drive motor bearing to minimize overhung loads. Align to run true and adjust belt or chain tension per manufacturer's specifications.

   CAUTION
   Excessive belt or chain tension will damage bearings or break shafts.

4. Furnish and install appropriate safety guards for all external rotating drive parts.

5. With "Piggy Back" mounting of the Drive Motors, Force Control furnishes all Drive Motor Mounting Parts and required Belt Guard(s). Drive belts and sheaves are provided as an option as per customer's requirements.

If the motor mounting parts are not furnished by Force Control, then the customer must supply and install all appropriate Safety Guards for all exposed drive rotating parts, as required.

6. The Air Breathers (#45 and #645) are removed before shipment and pipe plugs are put in their place. In most cases this will be a red plastic plug. This is to prevent oil spillage during shipment. These plugs must be removed and both Breathers (#45 and #645) installed to prevent damage to the drive. Both Breathers are taped to the drive for shipment.

   CAUTION: Failure to install both Air Breathers will result in overheating, which will cause the brake and clutch components to malfunction.

INDUSTRIAL MAGZA® DIST. AUTORIZADO MEX (55) 53 63 23 31 MTY (81) 83 54 10 18 QRO (442) 1 95 72 60 ventas@industrialmagza.com

7. After the drive has been in operation for a few hours, make sure that all mounting bolts are tight and re-check alignment of all driving components.
8. After 40 hours of operation, check mounting bolts and tighten if necessary.

3-3 WIRING SPECIFICATIONS

(See Motor Plate for Wiring Specifications)

3-4 PNEUMATICS

Note the following when planning and installing the Pneumatic System *(See Figure 3.1):*

1. Use direct acting solenoid air valves or pilot operated valves to give the response speed required. Locate the valves as close as possible to the air inlets on the drive. The valves may be installed directly on the drive if they are supported.
2. Be sure to use valves with a minimum Cv factor of .8. Cv of 1.5 works well in most cases. Lubricators are not necessary for the MSDr, but they may be used, if needed, for air valve operation.
3. The optional accumulator should be used for quick response, particularly if the air line loss and the nature of the air supply is such that recovery is slow. Size the accumulator to be at least ten (10) times the air required per engagement. **(See Section 2 SPECIFICATIONS)**. The accumulator would be installed between the filter and the air valve. (or lubricator, if used.)
4. Pressure is proportional to torque. Use only the pressure necessary to operate the drive.. This will give additional life to the drive.
5. A new drive will produce an abundance of torque until it has burnished in. Initial regulator settings should be set at about 80% of charted ratings **(See Section 2 - "TORQUE Vs ACTUATION PRESSURE")**. After using the drive for a few weeks, the acceleration time may increase. Increasing the air pressure will restore the acceleration.
6. Secondary motor must be off whenever the brake is engaged. Station 2 solenoid A is commonly connected to an auxiliary contactor on the secondary motor starter to prevent this problem.

3-5 START-UP

1. Lock out machine and air pressure. Verify that the Electrical Power is to avoid personal injury.
2. Recheck Air Connections for tightness to see if they are correct as shown in the Pneumatic Schema.tic *(Figure 3.1).*
3. Set Air Regulators to 80% of required air pressure. **(As charted in Section 2 "TORQUE Vs. ACTUATION PRESSURE".)**
4. Unlock Main Disconnect.
5. Check out Secondary Drive Speed mode for proper rotation and adjust all limit switches as needed.
6. Check operation of Primary Motor Drive.

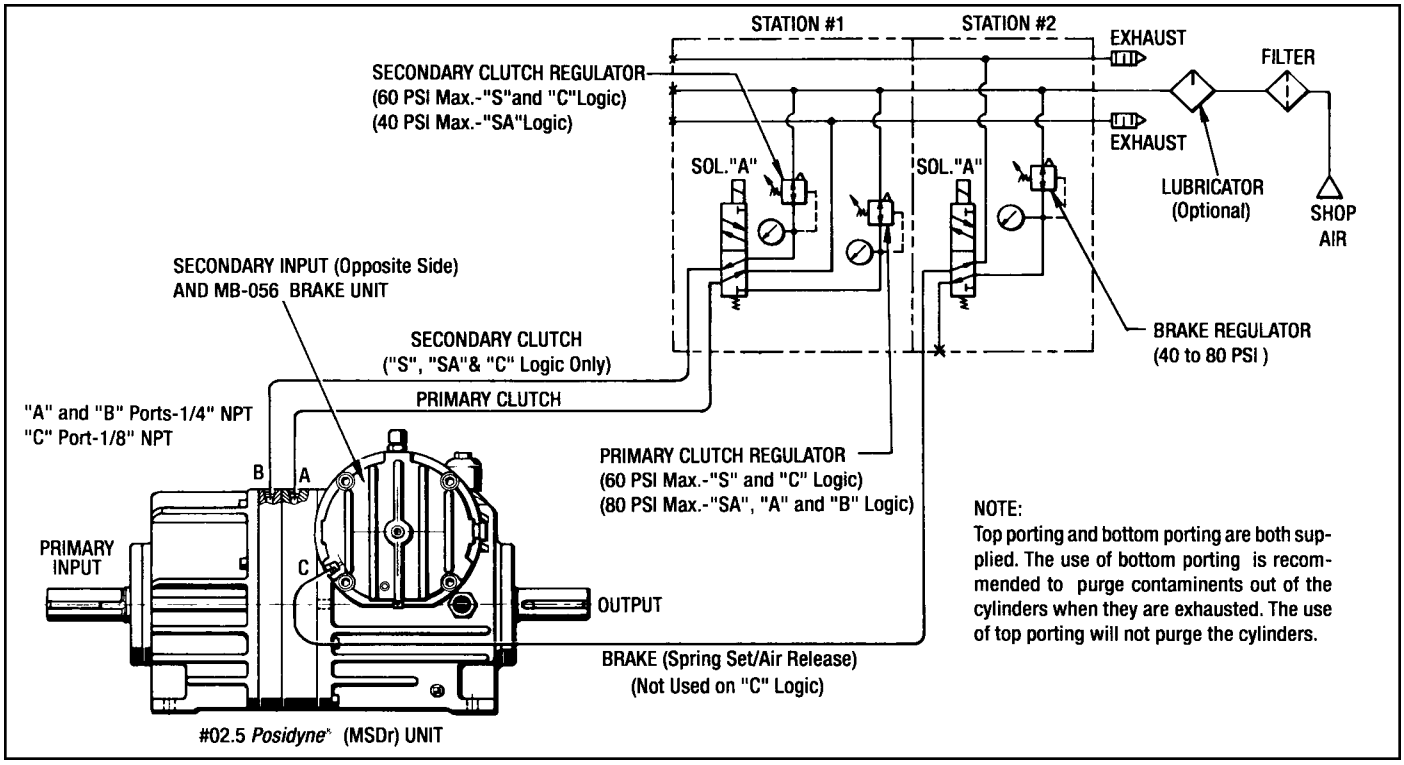

Figure 3.1 - Typical Pneumatic Schematic

INDUSTRIAL MAGZA® DIST. AUTORIZADO MEX (55) 53 63 23 31 MTY (81) 83 54 10 18 QRO (442) 1 95 72 60 ventas@industrialmagza.com

Section 4
LUBRICATION

4-1 CHECKING THE OIL LEVEL

When the drive is installed and weekly thereafter, or until experience dictates otherwise, check the oil level. Always check the oil level with the drive at room temperature and while the motors are not running. The drive has oil sight gauges located at the output end of the drive and on the MB-056 brake. The oil level is to show at the center of the gauges. *(See Figure 4.1)*

4-2 CHANGING THE OIL

IMPORTANT

Open the disconnects to the drive motors before attempting to change the oil.

Every three months completely drain the oil from the drive and brake using the drain plugs provided as shown in *Figure 4.1.* If the oil sight gauge is dirty, it should be removed and cleaned.

Reinstall the drain plugs and refill the drive and brake to the center of the sight gauges with fresh oil.

CAUTION

Do not overfill the Drive Unit. Excess oil will cause the unit to overheat.

4-3 TYPE OF OIL

Use only Mobil Automatic Transmission Fluid ATF 210 (Type “F”) or Multi-Purpose Automatic Transmission Fluid.

Other fluids may be specified for special applications.

Always use the type of fluid specified on the name plate.

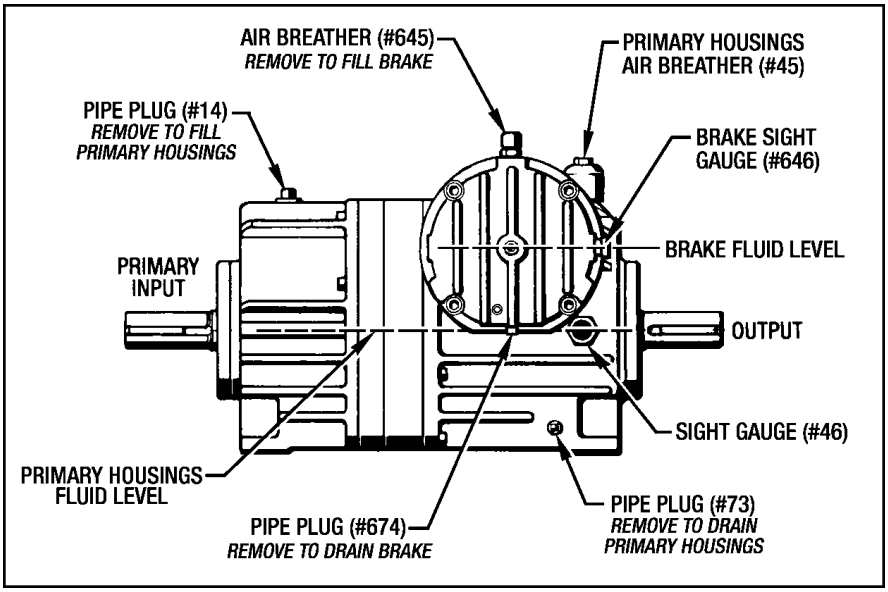

Figure 4.1 - Lubrication

INDUSTRIAL MAGZA® DIST. AUTORIZADO
MEX (55) 53 63 23 31 MTY (81) 83 54 10 18
QRO (442) 1 95 72 60 ventas@industrialmagza.com

Section 5
OPERATIONAL CHECKS

These Operational Checks are to be made when the Drive Unit is removed from service for repair. Provisions for manually controlled 60 to 80 PSI air pressure must be made for these Operational Checks.

5-1 GENERAL SET-UP INSTRUCTIONS

The set-up shown in *Figure 5.1* is only an example. The basic requirement is that the air supply have a quick acting shut-off action.

Install the 60 to 80 PSI air supply to the drive and remove the (2) Inspection Plugs and the Brake Breather.

CAUTION
Do not remove these Inspection Plugs or Breather while the drive is running.

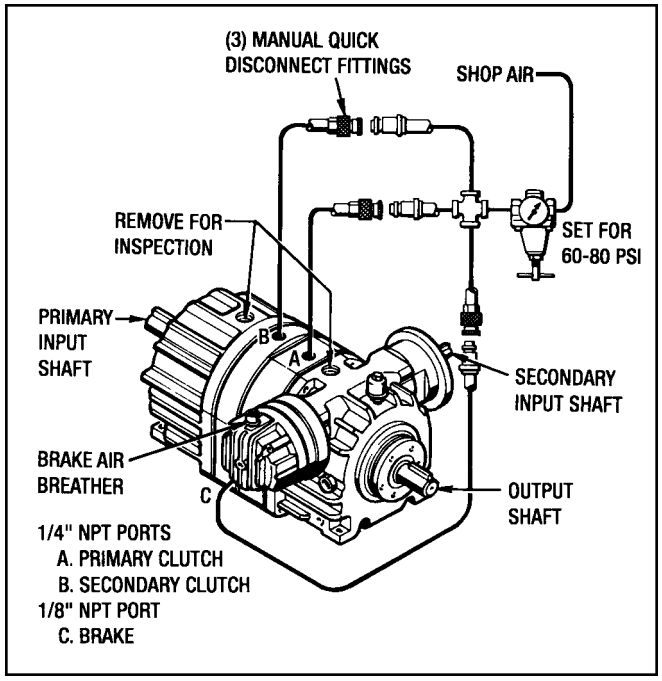

Figure 5.1 - Set-Up For Operational Checks

5-2 CHECKING CLUTCH AND BRAKE PISTON SEALS AND MOVEMENT

1 . Manually apply air to the “Primary Clutch” port A. With the aid of a flashlight, observe the Clutch Piston to see if it actuates quickly and smoothly. Internal damage may be indicated if the piston action is irregular or if it sticks or binds. Also listen for air leaks and look for air bubbles in the oil that would indicate damage to the piston seals.

2. Exhaust the air pressure from the Primary Clutch Port A and observe to see that the Clutch Piston moves back smoothly from the Primary to the Secondary Clutch.

3. Apply air to the “Secondary Clutch” port B (S, SA and C logic only). The piston should not move. The internal springs should have already shifted the piston from the primary to the secondary clutch stack. Listen for air leaks and look for air bubbles in the oil that would indicate damage to the piston seals.

4. Exhaust air from the “Secondary Clutch” port B.

5. Apply air to the “Brake” port C. The piston inside the brake should shift, but it won’t be visible. Listen for air leaks and look for air bubbles in the oil that would indicate damage to the piston seals.

6. Exhaust air from the “Brake” port C. Replace the inspection plugs and breather.

5-3 CHECKING CLUTCH AND BRAKE ENGAGEMENT or INPUT SHAFT Vs. OUTPUT SHAFT ROTATION

(WITH MALE INPUT SHAFT)

When applying air pressure to the desired” Clutch” port A or B and “Brake” port C, simply rotate the proper Input Shaft by hand and observe the rotation of the Output Shaft. Likewise, when the air pressure is removed from the “Brake” port C and applied to the “Secondary Clutch” port B, the Output Shaft should be locked in the braking position and should not rotate.

(WITH C-FACE MOUNTED DRIVE MOTORS)

If the C-Face mounted Drive Motors are still attached then the Input Shafts are not accessible to be manually rotated to check the Clutch/Brake Engagement and Input Shaft vs. Output Shaft Rotation.

Temporarily hook up the Drive Motors and “Bump” them to check the Clutch or Brake Operating Modes and Output Shaft Rotation.

CAUTION
Do not attempt to run motors with the Inspection Plugs or Breather removed. They first must be replaced.

INDUSTRIAL MAGZA® DIST. AUTORIZADO MEX (55) 53 63 23 31 MTY (81) 83 54 10 18 QRO (442) 1 95 72 60 ventas@industrialmagza.com

5-4 DRIVE MOTORS

Check wiring connections against the wiring diagram on the Name Plate. “Bump” the Drive Motors and check direction of rotation. Apply air to “Brake” port C before starting secondary input motor. Check all connections for tightness.

5-5 PNEUMATIC CONTROL

The Pneumatic Control Operational Checks are to be made with all Control Valves hooked up.

1 . Shut off air supply, lock it out and bleed off any trapped air in the system.

2. Insert Diagnostic Pressure Gauges in the air supply between the control valves and the drive. (See Figure 5.2)

3. Activate Solenoid Control Valves for desired function. (See Logic Diagrams below in Figure 5.2)

a. Primary Clutch
b. Secondary Clutch
c. Brake

4. Check air pressure with installed diagnostic pressure gauges for each function.

5. Check all electrical connections and solenoid operations per manufacturer’s specifications.

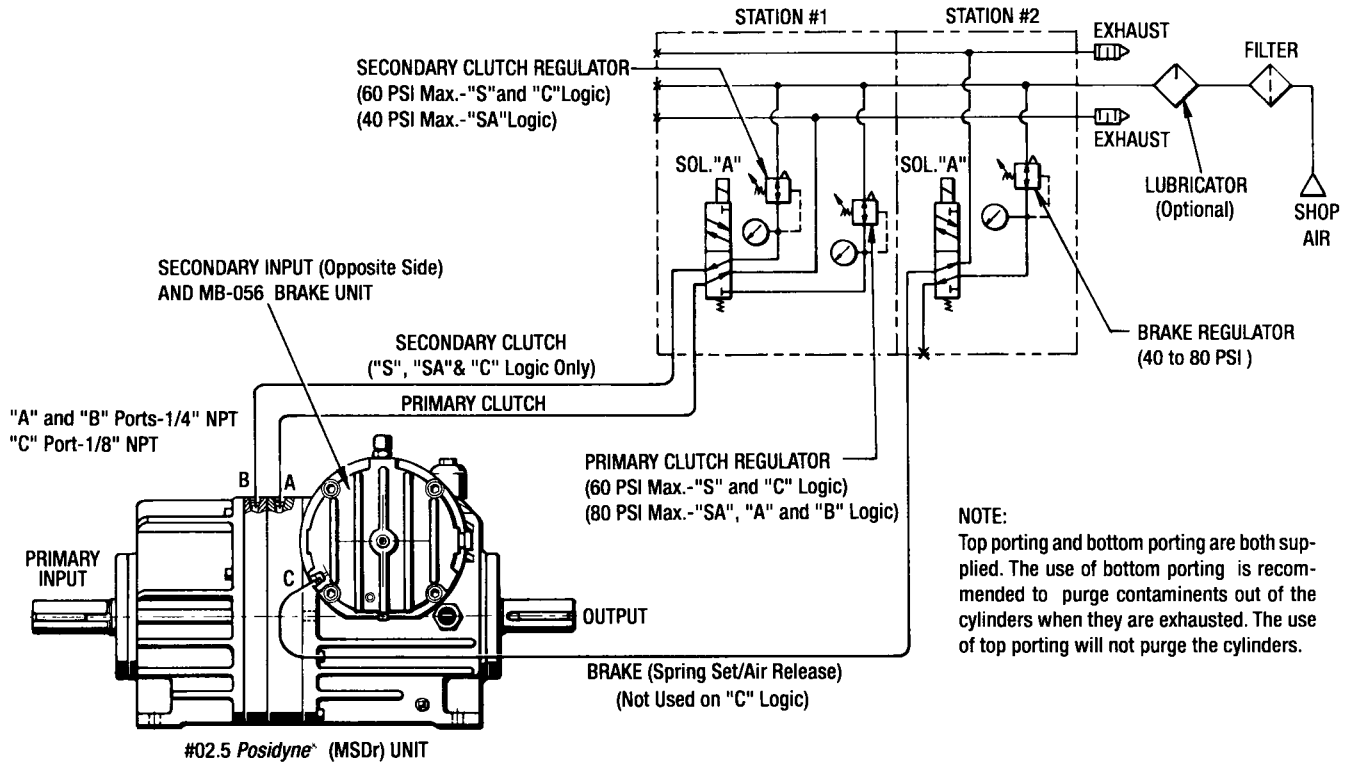

FUNCTION	PNEUMATIC CONTROL VALVE		*Posidyne* MULTI-SPEED DRIVE			
	STATION 1 SOLENOID A	STATION 2 SOLENOID A	PRESSURE TO PORT	PRIMARY CLUTCH	SECONDARY CLUTCH	BRAKE*
HIGH SPEED	ON ON	OFF or ON	A or A and C	ENGAGED ENGAGED	DISENGAGED DISENGAGED	ENGAGED or DISENGAGED
LOW SPEED	OFF	ON	B** and C	DISENGAGED	ENGAGED	DISENGAGED
STOP	OFF	OFF	B**	DISENGAGED	ENGAGED	ENGAGED

* Secondary motor must be off whenever brake is engaged. Station 2, Solenoid A is commonly connected to an auxiliary contactor on the Secondary Motor Starter to prevent this problem.

**S, SA and C Logic only.

Figure 5.2 - Pneumatic Control Diagram

INDUSTRIAL MAGZA® DIST. AUTORIZADO MEX (55) 53 63 23 31 MTY (81) 83 54 10 18 QRO (442) 1 95 72 60 ventas@industrialmagza.com

Section 6
TROUBLESHOOTING

CAUTION
Open disconnect to prime movers and lock it out while making repairs or checking machinery to avoid any personal injury.

6-1 TROUBLESHOOTING CHART

SYMPTOM	POSSIBLE CAUSE	REMEDY
A. Primary clutch engages too quickly.	1. Air pressure too high. 2. Low oil level or wrong kind of oil.	a b
B. Primary clutch engages too slowly.	1. Air pressure too low. 2. Worn friction surfaces. 3. Stuck or damaged piston assembly. 4. Wrong oil.	c d e b
C. Secondary clutch engages too quickly. (Secondary clutch acts as a brake when stopping from high speed.)	1. Air pressure too high. 2. Too many springs in piston assembly. 3. Low oil level or wrong oil.	a f b
D. Secondary clutch engages too slowly. (Secondary clutch acts as a brake when stopping from high speed.)	1. Air pressure too low. 2. Not enough springs or damaged piston assembly. 3. Worn friction surfaces. 4. Wrong oil.	c g d b
E. Brake engages too quickly when stopping from low speed.	1. Too much brake torque. 2. Low oil level or wrong oil.	h b
F. Brake engages too quickly when stopping from low speed	1. Too little brake torque. 2. Worn friction surfaces. 3. Excessive high speed inertia. 4. Wrong oil.	h d i b
G. Noise or vibration.	1. Mounted on poor foundation. 2. Misaligned couplings. 3. Belt drive misaligned. Over/under tensioned. 4. Damaged bearings. 5. Low oil level or wrong oil.	i k l m b
H. Drive overheats. (Oil Temp. above 225° F)	1. Improper oil level or wrong oil. 2. Excessive clutch or brake slippage. 3. Excessive friction in machine. 4. Cooling not functioning properly.	b n o p
I. Oil leakage out breather.	1. Oil level too high. 2. Piston seals leaking air.	b e
J. Positioning not consistent.	1. Inconsistent electrical signal. 2. Oil temperature change. 3. Air pressure inconsistent. 4. Faulty air valve.	q r s t

INDUSTRIAL MAGZA® DIST. AUTORIZADO MEX (55) 53 63 23 31 MTY (81) 83 54 10 18 QRO (442) 1 95 72 60 ventas@industrialmagza.com

6-2 REMEDIES

When checking pneumatics, shut off air supply, lock it out, and bleed off any trapped air in the system. Insert “diagnostic pressure gauges” in the air supply between the valves and drive or in the extra ports in the drive.

a. Reduce air pressure.

b. See Section 4 LUBRICATION

c. Increase air pressure d. Disassemble to extent necessary and replace disc stack.

e. See Sections 5-1 and 5-2 for diagnosis. Disassemble and repair Piston Assembly.

f. Contact factory for assistance.

g. Contact factory if more springs are required. Disassemble and repair Piston Assembly.

h. See Parts List for *Figure 10.5* for Torque Options.

i. Coupling or belt drive between secondary motor and secondary input should be low inertia (small diameter). Change to different coupling or belt drive.

j. Check mounting bolts and foundation.

k. Align coupling to manufacturers specifications.

l. Install belt drive to manufacturers specifications.

m. Disassemble to extent necessary and replace damaged bearings.

n. Clutches and brake should not slip for more than 2 seconds. Increase clutch or brake torque.

o. Machine may need lubrication. Examples: Ways on a slide drive may have run dry, also most gear reducers are shipped from the manufacturer without oil.

p. On water cooled drives, check the water supply and drain for restriction or loss of flow. On fan cooled drives, check for restriction around fan or shroud.

q. Limit switch, proximity switch or relay may be faulty. Circuit may not be hardwired to eliminate PLC scan time. Replace switch or relay. Hardwire stop switch to eliminate PLC scan time.

r. For installations requiring precise positioning, operating temperatures are important. Operating temperatures between 115” and 165” F. are recommended. If the oil is allowed to drop to ambient temperature overnight, the primary clutch input shaft should be run for approx. 112 hour before operating machinery.

s. Line pressure may be fluctuating. Regulator may be faulty. Check air supply. Replace air regulator.

t. Air valve may be faulty. Replace air valve.

INDUSTRIAL MAGZA® DIST. AUTORIZADO MEX (55) 53 63 23 31 MTY (81) 83 54 10 18 QRO (442) 1 95 72 60 ventas@industrialmagza.com

SECTION 7
DISASSEMBLY

WARNING
Before attempting any repairs on the Drive Unit, open disconnects to the prime mover, shut off air supply and lock them out to avoid any possibility of personal injury.

7-1 GENERAL DISASSEMBLY PROCEDURE

1. Disconnect the drive and move it to a suitable work area.

   NOTES: On belt driven or direct coupled units, remove all necessary safety guards, belts, sheaves and couplings.

   Disconnect water inlet and outlet piping on water cooled units.

   Disconnect all necessary pneumatic piping.

2. Remove drain plugs at the bottom of the Drive Unit and the Brake. Drain all of the oil into a suitable container and either save for reuse or discard as the condition warrants.

   NOTES: For ease of disassembly, we recommend that you set the Drive Unit on the output end with the output shaft in a vertical down position.

   Supply suitable bracing and clamping to stabilize the Drive Unit.

   An overhead crane and a soft sling is also recommended to remove heavy castings and parts.

   IMPORTANT
   Unless the drive is to be completely over hauled, it should only be disassembled to the extent necessary to gain access to the worn or damaged parts.

The MSDr Unit is comprised of (4) basic Sub-Assemblies which can be disassembled as complete sub-assemblies for easy access to the Clutch and Brake Stacks. *(See Figure 10.1)*

1. PRIMARY INPUT HOUSING SUB-ASSEMBLY *(See Figure 10.2)*

   a. Optional Fan Cooling and Water Cooling *(See Figure 10.3)*

2. PISTON RETAINER AND HOUSING SUB-ASSEMBLY *(See Figure 10.4)*

3. BRAKE SUB-ASSEMBLY *(See Figure 10.5)*

4. SECONDARY INPUT/ OUTPUT HOUSING SUB-ASSEMBLY
   a. Secondary Input Shaft and Output Shaft *(See Figure 10.6)*

   b. Secondary Input Worm Shaft *(See Figure 10.7)*

7-2 REMOVING C-FACE MNTD. DRIVE MOTORS

1. Attach an appropriate soft sling or lifting hook to the Drive Motor for support and removal.
2. Remove the motor mounting screws and lockwashers from the C- Face Adapter.
3. Pull motor back to disengage pilot and quill shaft or coupling.

IMPORTANT
Be sure to support the motor so its weight is not pushing down on the *Posidyne* Input Shaft.

(FAN COOLED UNITS ONLY)

7-3 REMOVING FAN SHROUD AND FAN

(See Figure 10.3)

1. Remove (2) Screws (#66) from the front of the Fan Shroud (#24).
2. Pull the Fan Shroud (#24) away from the Primary Input Housing Sub-Assembly.
3. Loosen Set Screw (#70) and remove Fan (#25) from the Primary Input Shaft (#2).
4. Remove both Keys (#37) and (#180).

7-4 SEPARATION AND REMOVAL OF MAJOR SUB-ASSEMBLIES FOR ACCESS TO THE CLUTCH AND BRAKE STACKS

(See Figure 10.1 and 10.5)

NOTES:

1. Jackscrew holes are provided to aid in separation of the main housings from each other.

2. Do not attempt to reuse any Gaskets removed during Disassembly. They must be replaced with new ones at Reassembly.

INDUSTRIAL MAGZA® DIST. AUTORIZADO MEX (55) 53 63 23 31 MTY (81) 83 54 10 18 QRO (442) 1 95 72 60 ventas@industrialmagza.com

3. When removing the Clutch Stacks, always keep the Drive Plates (#13) and Friction Discs (#12) in the same order as they were removed.

4. Also when removing the Brake Stack, keep the Drive Plates (#612) and Friction Discs (#613) in the same order as they were removed.

(PRIMARY CLUTCH STACK)

1. Remove(4) Screws (#61) and (4) Lockwashers (#126) from the input end of the Primary Input Housing SubAssembly.
2. Remove(8) Screws (#69) and (8) Lockwashers (#126) from the output end of the Output Housing SubAssembly.
3. Using jackscrews, separate and lift the Primary Input Housing Sub-Assembly away from the Drive Unit.
4. Remove and discard Gasket (#53).
5. The Primary Clutch Stack can now be removed from the Output Shaft Spline.

(SECONDARY CLUTCH STACK)

1. Using jackscrews, separate and remove the Piston Retainer and Housing Sub-Assembly away from the Secondary Input / Output Housing Sub-Assembly.
2. Remove and discard Gasket (#53).
3. The Secondary Clutch Stack can now be removed from the Output Shaft Spline.

(BRAKE STACK)

1. Remove (2) Screws (#652) and (2) Lockwashers (#627) from the front of the Brake Unit.
2. Slide the Brake Unit away from the Adapter Plate (#678). *(See Figure 10.7)*
3. Remove and discard Gasket (#622).
4. Carefully remove (2) Screws (#655) and (2) Lockwashers (#628) from the back side of the Brake Unit. Back off screws partially and be sure Adapter Plate (#679) separates from End Housing (#609) before completely removing screws.

CAUTION

The Brake Assembly is under Spring Pressure and care must be taken to avoid personal injury when removing Screws (#655) and separating the Brake Sub-Assembly.

5. Remove and discard Gasket (#622).
6. Remove Springs (#636). (The quantity of springs are predetermined at the factory for your Brake Torque Requirements. When removing these springs, if all the holes are not used, it would be helpful for you to make a freehand sketch locating the position of the springs. This will help at Reassembly.
7. Remove the Piston Sub-Assembly. Inject compressed air into actuation port if necessary to pop out the piston.
8. The Brake Stack can now be removed from the Brake Housing.

If repair or replacement of the Clutch or Brake Stack is the only repair to be done, then proceed to Section 8 CLEANING AND INSPECTION.

7-5 REMOVAL OF HEAT EXCHANGER

(See figure 10.3)

1. Remove all external fittings from Input Housing.
2. Remove (2) Screws (#56) and with a suitable punch, tap out the tube ends and remove the Heat Exchanger (#48).

DISASSEMBLY OF MAJOR SUB-ASSEMBLIES

7-6 PRIMARY INPUT HOUSING SUB-ASSEMBLY WITH MALE INPUT SHAFT

(See Figure 10.2)

1. If the Key (#180) is still intact in the Primary Input Shaft (#2), remove it at this time.
2. Wrap tape around the length of the shaft to protect the oil seal from the keyway.

IMPORTANT

Do not attempt to remove the Primary Input Shaft unless Bearings (#26 or #38) has to be replaced.

3. Unscrew (6) Screws (#100) and remove them. Take the Bearing Retainer (#7) off over the input shaft, being careful not to damage the lip of the Oil Seal (#32).
4. Check the Oil Seal (#32) and replace if necessary
5 Remove the Locknut (#33) from the Input Shaft (#2).
6. Remove and discard Gasket (#55).

INDUSTRIAL MAGZA® DIST. AUTORIZADO MEX (55) 53 63 23 31 MTY (81) 83 54 10 18 QRO (442) 1 95 72 60 ventas@industrialmagza.com

7-7 REMOVING THE MALE PRIMARY INPUT SHAFT FROM PRIMARY INPUT HOUSING

1. Use an arbor press to press the Input Shaft out of the Input Housing. *(See Figure 7.1)*

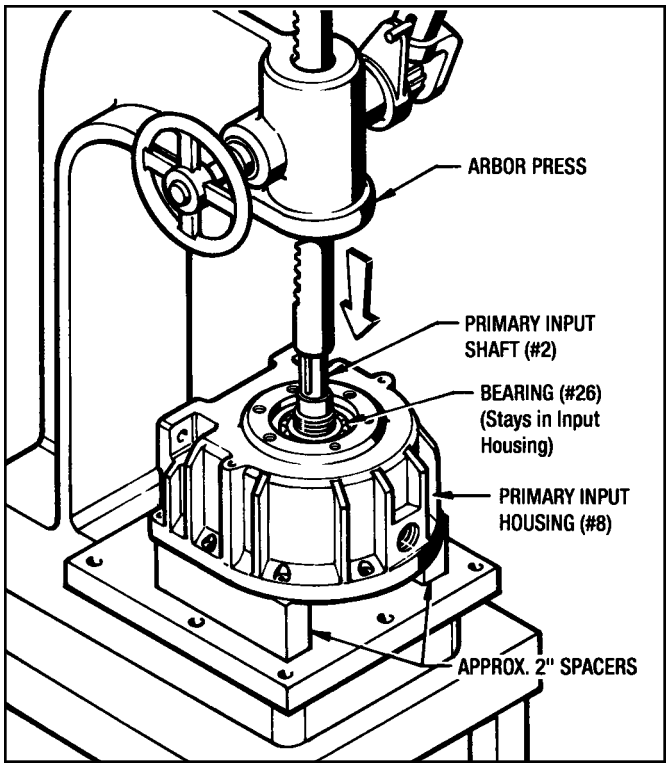

Figure 7.1 - Removing Primary Input Shaft

2. Remove Bearing (#26) from the Input Housing.
3. With an Arbor Press and a Bearing Splitter, press the Input Shaft (#2) out of the Bearing (#38). *(See Figure 7.2)*.

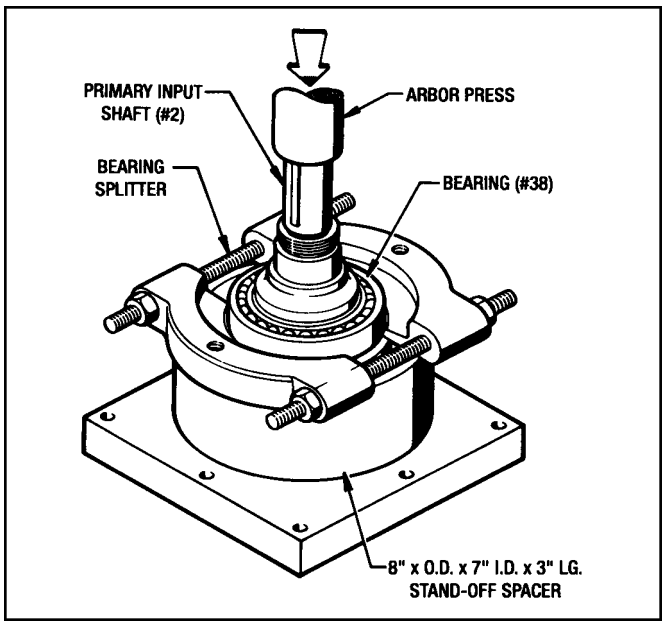

Figure 7.2 - Removing Bearing (#38) From Input Shaft

7-8 PRIMARY INPUT HOUSING SUB-ASSEMBLY WITH QUILL INPUT SHAFT

(See Figure 10.2)

1. Unscrew (6) Screws (#100) and remove them. Take the Bearing Retainer (#16) off over the input shaft, being careful not to damage the lip of the Oil Seal (#32).
2. Check the Oil Seal (#32) and replace if necessary.
3. Remove the Locknut (#33) from the Input Shaft (#2).
4. Remove and discard Gasket (#56).
5. Using the same procedure as described in 7-7, remove the Quill Input Shaft (#2) from the housing with an arbor press *(See Figure 7.1)*.
6. Remove Bearing (#26) from the Input Housing.
7. With an Arbor Press and a Bearing Splitter, press the Input Shaft (#2) out of the Bearing (#38). *(See Figure 7.2).*

   NOTE: If leakage was indicated within the Quill Input Shaft, then the O-Ring (#104) needs to be replaced.

8. With a suitable dull punch, knock out the Freeze Plug (#99) from the input end of the Input Shaft. Check and replace O-Ring (#104) if necessary.

7-9 PRIMARY PISTON RETAINER AND HOUSING SUB-ASSEMBLY

(See Figure 10.4)

1. Evenly back out and remove (4) Screws)#62) and (4) Lockwashers (#127).

   CAUTION

   The Piston Retainer Sub-Assembly is under spring pressure and care must be taken to avoid injury when removing these Screws (#62).

2. Separate the Piston Retainer (#191) from the Piston Housing (#10).
3. Remove Springs (#36). (The number of springs are predetermined at the factory for your Torque Requirements. When removing these springs, it would be helpful for you to make a freehand sketch, locating the position of the springs. This will help at Reassembly.)
4. Remove and discard Gasket (#51).
5. Remove the Piston Sub-Assembly which consists of: (a) Thrust Plate (#5), (b) (2) Bearings (#27), (c) Piston (#3), (d) (2) O-Rings (#40), (e) Teflon Liner (#43) and (f) Thrust Plate (#101).

INDUSTRIAL MAGZA® DIST. AUTORIZADO MEX (55) 53 63 23 31 MTY (81) 83 54 10 18 QRO (442) 1 95 72 60 ventas@industrialmagza.com

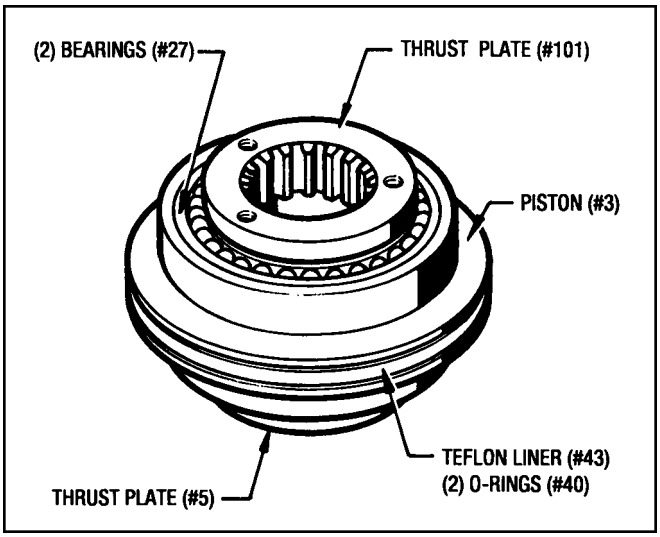

Figure 7.3 - Piston Sub-Assembly

6. The Teflon Liner (#43) and (2) O-Rings (#40) can now be removed for inspection and replacement. *(See Figure 7.3)*
7. Using the jackscrew holes located in the Thrust Plate (#101), thread (3) 10-24 UNC x 4" lg. Screws into the Thrust Plate and force it out of the Bearing (#27). *(See Figure 7.4*

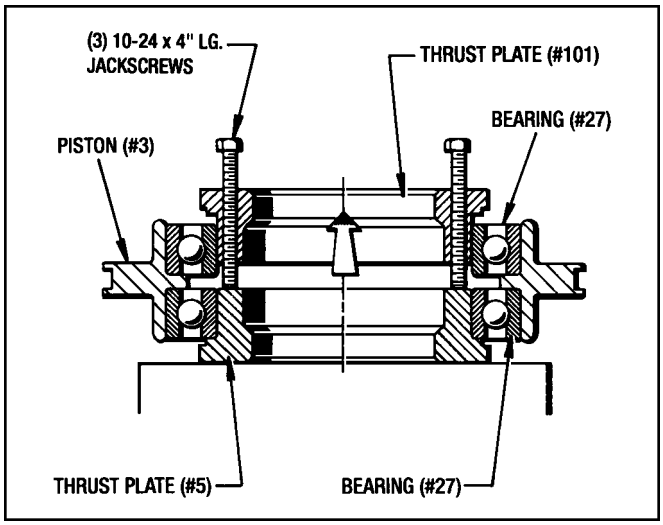

Figure 7.4 - Removing Thrust Plate (#101) From Piston

8. Press out the remaining Thrust Plate (#101) with an Arbor Press.
9. If the (2) Bearings (#27) are still intact in the Piston (#3), insert (1) or (2) steel strips 1/8" x 1" x 3-7/8" between the bearings and use an Arbor Press to press out one of the Bearings. *(See Figure 7.5)*

The other Bearing (#27) can now be easily pushed out of the Piston with an Arbor Press.

10. The (2) Teflon Liners (#42) and (2) O-Rings (#39) can now be removed from the Piston Retainer and Housing and replaced if necessary.

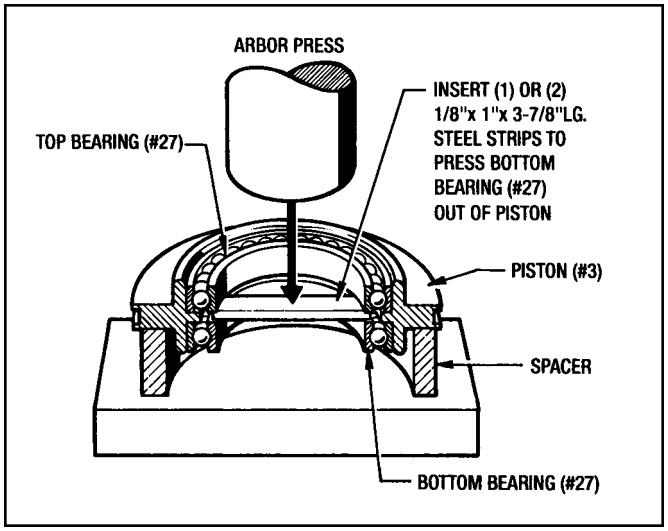

Figure 7.5 - Pressing Out Bearing (#27)

7-10 BRAKE SUB-ASSEMBLY

(See Figures 10.1 and 10.5)

1. Remove (2) Screws (#652) and (2) Lockwashers (#627) from the front of the Brake Unit and slide the Brake Unit off of the Hub (#602).
2. Remove and discard Gasket (#622).
3. Take the Hex Hd. Cap Screw (#651) and Seal Washer (#630) out of the end of the Hub (#602). Screw a 3/8" 16 UNC x 1/2" Lg. Soc. Set Screw into the Collet (#606). Then screw a 1/2" 13 UNC x 1-1/2" Lg. Hex Hd. Cap Screw into the Hub until it contacts the Set Screw, continue turning the Hex Hd. Screw until the Hub (#602) is forced off of the Collet (#606). *(See Figure 7.6).*

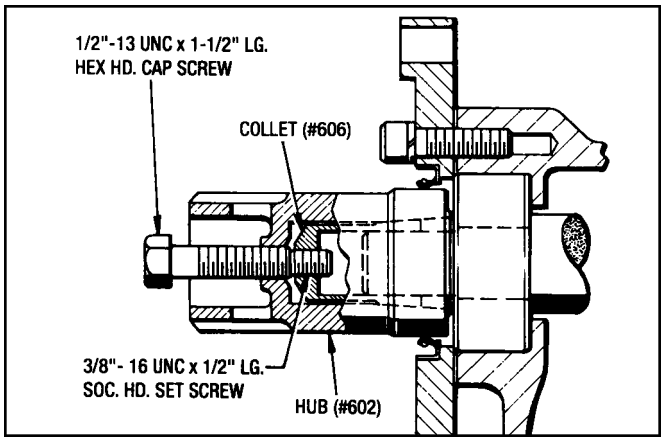

Figure 7.6 - Brake Collet & Hub Disassembly

4. With care, remove (2) Screws (#655) and (2) Lockwashers (#628) from the Adapter Plate (#679).

CAUTION

The Brake Sub-Assembly is under spring pressure so care must be taken to avoid personal injury when removing Screws (#655).

INDUSTRIAL MAGZA® DIST. AUTORIZADO MEX (55) 53 63 23 31 MTY (81) 83 54 10 18 QRO (442) 1 95 72 60 ventas@industrialmagza.com

5. Remove and discard Gasket (#622).
6. Remove Springs (#636). (The quantity of springs are predetermined at the factory for your Brake Torque requirements.) When removing these springs, if all of the holes are not used, it would be helpful for you to make a freehand sketch locating the position of the springs. This will help at Reassembly.
7. Remove the Brake Piston Sub-Assembly. Inject compressed air into the actuation port, if necessary, to pop out the piston.This Piston Sub-Assembly consists of: (a) Piston(603), (b) Liner (#643) and (2) O-Rings (#639).
8. The Teflon Liner (#643) and (2) O-Rings (#639) can now be removed from the Piston for inspection and replacement.
9. Remove the Teflon Liner (#642) and (2) O-Rings (#640) from the End Housing (#609).
10. There is a Wear Sleeve (#676) located in the End Housing (#609). This sleeve is used to aid in proper oil distribution through the Brake Stack.

    Check the Sleeve for damage and if replacement is necessary, use a small chisel to remove it from the End Housing.

7-11 SECONDARY INPUT AND OUTPUT HOUSING SUB-ASSEMBLY *(See Figure 10.7)*

(WITH MALE INPUT WORM SHAFT)

Remove any remaining belt guards, belts, sheaves or pulleys connected to the Secondary Input Worm Shaft or the Output Shaft. (See *Figure 7.7* for removal of Input Sheave or Pulley

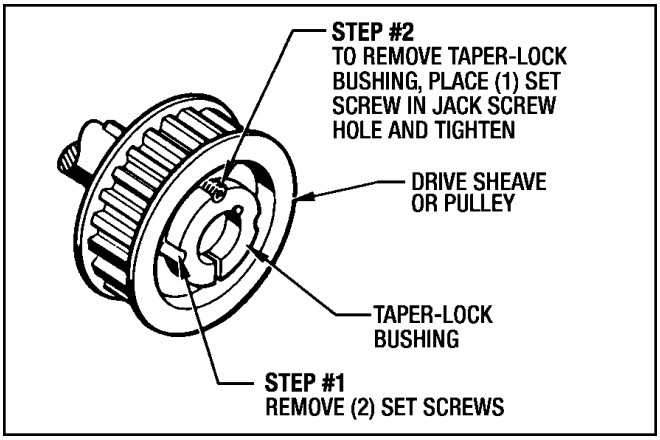

Figure 7.7 - Removing Input Sheave or Pulley

On the Brake Side...

1. Remove (4) Screws (#199) and (4) Lockwashers (#627) and take the Bearing Retainer (#678) off.
2. Check the Oil Seal (#631) and, if necessary, remove it from the Bearing Retainer (#678).
3. Remove and discard Gasket (#623).
4. Slide the Spacer (#677) and the Bearing Spacer (#23) off the Worm Shaft (#153).

On the Drive Side...

5. Remove the Key (#166) from the Worm Shaft (#153). Tape the keyway so the oil seal lip will not be damaged when removed.

(C-FACE ADAPTER WITH COUPLING)

6. If the Coupling (#247) is still intact on the Input Shaft, loosen the set screw in the coupling and remove it from the shaft.

   Remove (4) Screws (#199) and (4) Lockwashers (#202) and take the C-Face Adapter (#155) off. Be careful not to damage the Oil Seal (#158)

(STANDARD MALE INPUT SHAFT)

6. Remove (4) Screws (#199) and (4) Lockwashers (#175) and remove Bearing Retainer (#155) carefully so the oil seal lip will not be damaged.
7. Check the lip of Oil Seal (#158) and remove if necessary.
8. Remove Shims (#293) and save for Reassembly.
9. Slide both Bearing Cups (#167) out of the bearing bores.
10. With an arbor press, press the brake end (smaller dia. shaft) of the Worm Shaft (#153) until one of the Bearing Cones (#168) slides off of the bearing shaft diameter. *(See Figure 7.8)*

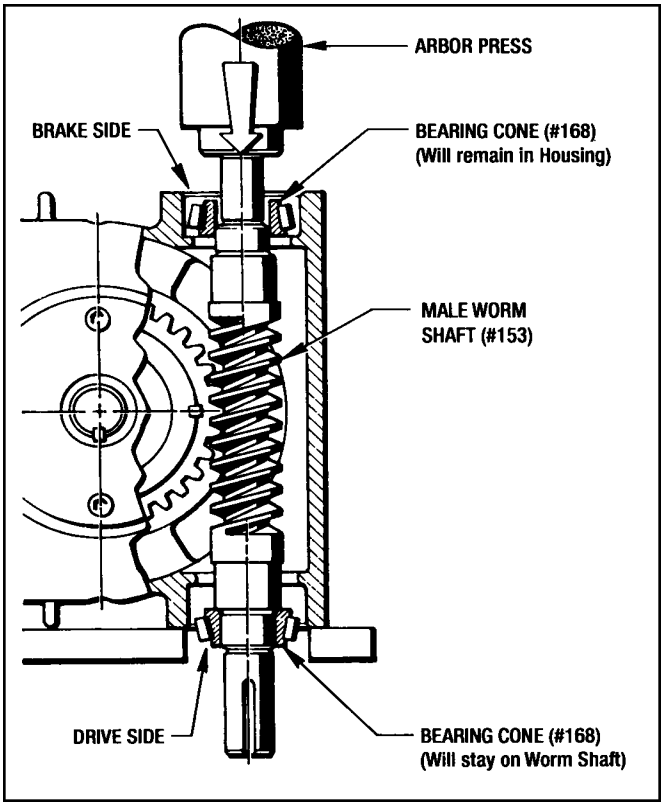

Figure 7.8 - Pressing Male Worm Shaft Out Of Housing

INDUSTRIAL MAGZA® DIST. AUTORIZADO MEX (55) 53 63 23 31 MTY (81) 83 54 10 18 QRO (442) 1 95 72 60 ventas@industrialmagza.com

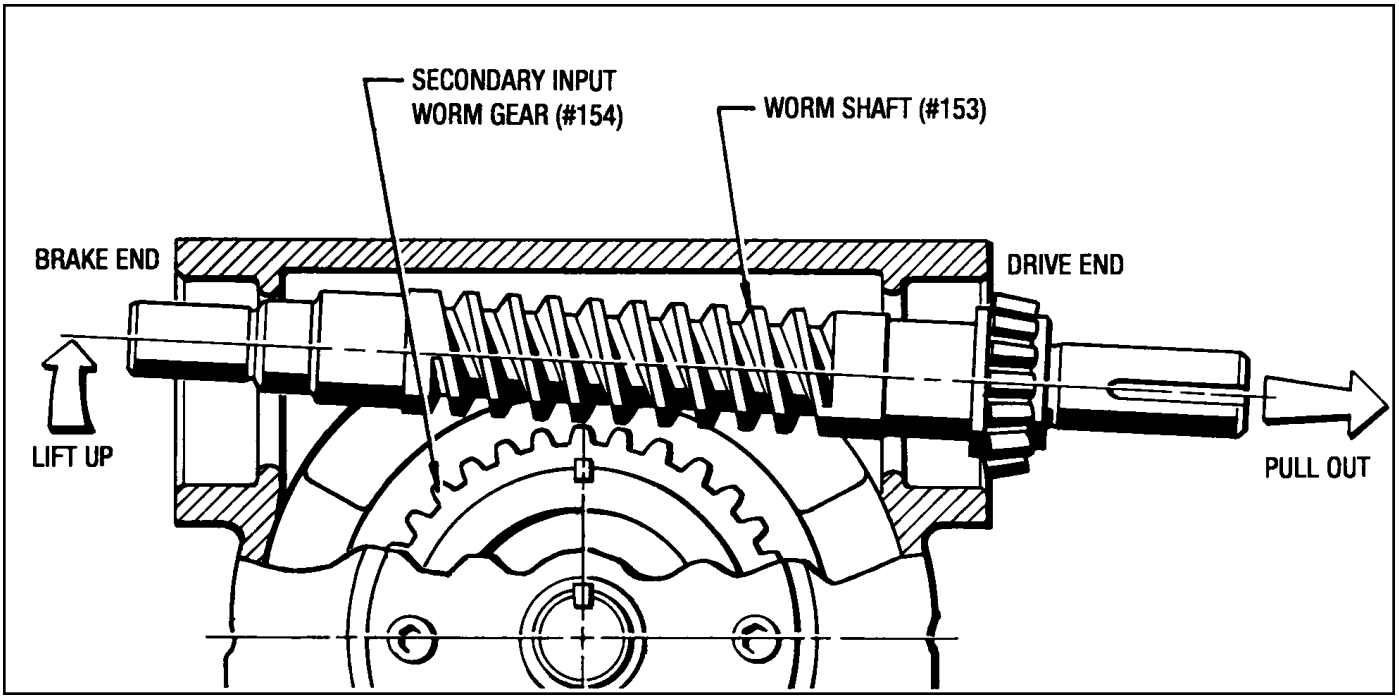

Figure 7.9 - Removing Male Worm Shaft From Housing

11. From the end of the Worm Shaft that still has a Bearing Cone (#168) on it, pull the Worm Shaft (#153) out of the Housing (#9) lifting and tilting it over the Worm Gear. *(See Figure 7.9)*
12. Use a bearing puller to remove the remaining Bearing Cone (#168) off of the Worm Shaft (#153).

7-12 SECONDARY INPUT SUB-ASSEMBLY

(See Figure 10.7)

(WITH QUILL INPUT WORM SHAFT)

1. On the Brake End, remove (4) Screws (#199) and (4) Lockwashers (#627) and take the Bearing Retainer (#678) off.
2. Check the Oil Seal (#631) and, if necessary, remove it from the Bearing Retainer (#678).
3. Remove and discard Gasket (#623).
4. Slide the Spacer (#677) off the Worm Shaft (#153).
5. On the drive side, remove (4) Screws (#199) and (4) Lockwashers (#202).
6. Slide the C-Face Adapter (#155) off the Quill Input Shaft (#153) being careful not to damage the lip of the Oil Seal (#158).
7. Check Oil Seal (#158) and replace if necessary.
8. Remove and discard Gasket (#623).
9. Press the brake end of the Worm Shaft (#1 53) until the Bearing (#157) slides off the bearing shaft diameter. *(See Figure 7.10)*
10. Pull the Bearing (#157) out of the bearing bore.

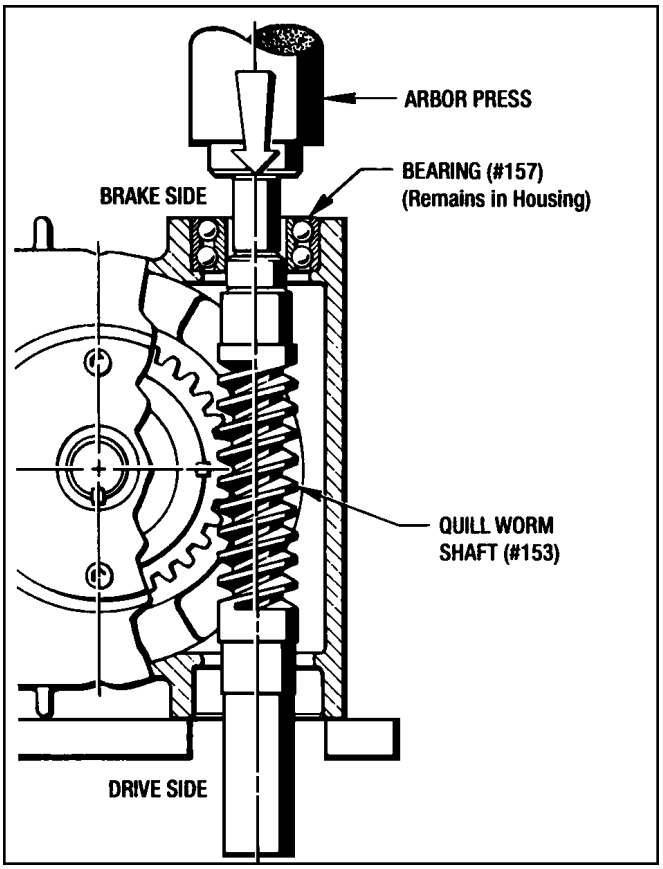

Figure 7.10 - Pressing Bearing (#157) Off Worm shaft

11. From the Quill End of the shaft pull the Worm Shaft (#153) out of the housing, lifting it over the Worm Gear. *(See Figure 7.11)*

INDUSTRIAL MAGZA® DIST. AUTORIZADO MEX (55) 53 63 23 31 MTY (81) 83 54 10 18 QRO (442) 1 95 72 60 ventas@industrialmagza.com

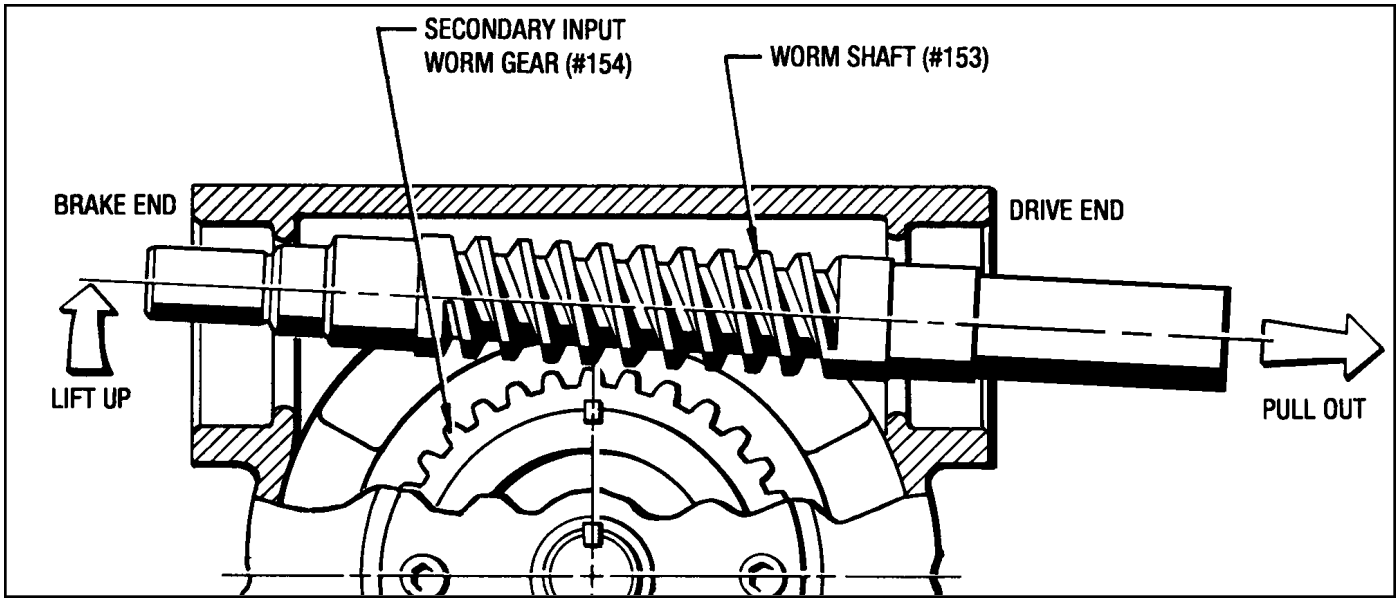

Figure 7.11 - Removing Quill Worm Shaft From Housing

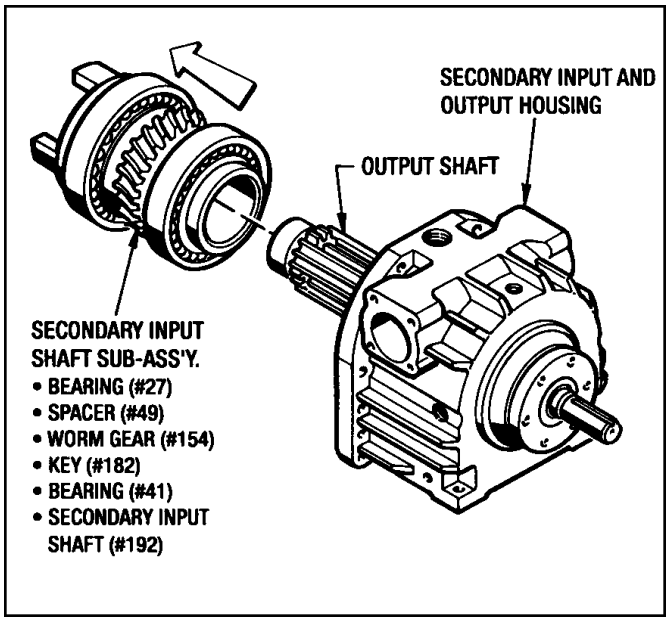

Figure 7.12 - Removing Secondary Input Shaft Sub-Assembly

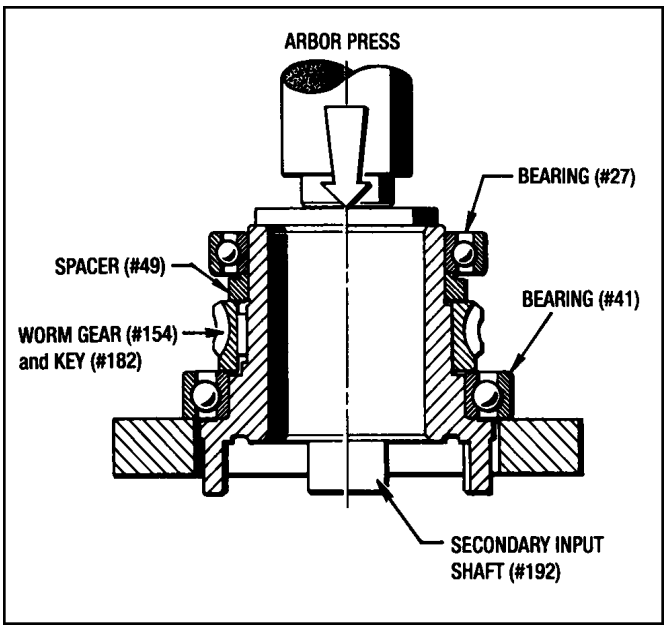

Figure 7.13 - Disassembly of Secondary Input Shaft

7-13 SECONDARY INPUT SHAFT SUB-ASSEMBLY *(See Figure 10.6)*

1 Unscrew (6) Screws (#159) and (6) Lockwashers (#1 28) and remove the Bearing Retainer (#162).

2. Remove Shims (#292) and save for Reassembly.

3. Slide the Secondary Input Sub-Assembly out of the housing over the Output Shaft. *(See Figure 7.12)*

4. Place the Secondary Input Shaft into an Arbor Press and press Bearings (#27 and #41), Spacer (#49) and Worm Gear (#154) off of the Secondary Input Shaft (#192). *(See Figure 7.13)*

5. Take the Key (#182) out of the Secondary Input Shaft (#1 92).

INDUSTRIAL MAGZA® DIST. AUTORIZADO MEX (55) 53 63 23 31 MTY (81) 83 54 10 18 QRO (442) 1 95 72 60 ventas@industrialmagza.com

7-14 REMOVING THE OUTPUT SHAFT FROM THE OUTPUT HOUSING

1 . If the Key (#181) is still intact in the Output Shaft (#1), remove it at this time and place tape over the keyway.

2. Remove (6) Screws (#63) and (6) Washers (#126) and carefully remove the Bearing Retainer(#7) so the oil seal lip is not damaged.

3. Check the Oil Seal (#32) and replace if necessary.

4. Remove and discard Gasket (#55).

5. Using a rubber mallet, tap on the back of the Output Shaft (#1) until the Bearing (#35) comes out of the bearing bore. Pull the Output Shaft (#1) and the Bearings (#28 and #35) out of the front of the housing. *(See Figure 7.14)*

6. Remove Locknut (#34) from the Output Shaft (#1).

7. Use a standard Bearing Puller to remove both Bearings (#28 and #35) from the Output Shaft (#1).

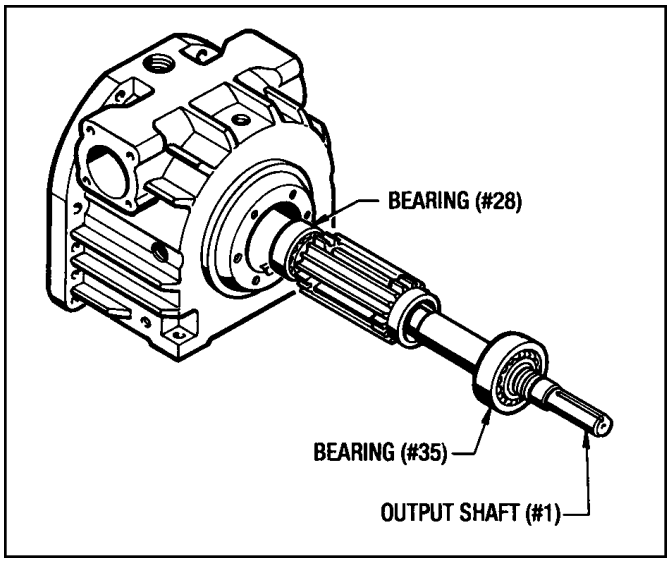

Figure 7.14 - Removing The Output Shaft

THIS COMPLETES THE DISASSEMBLY PROCEDURE FOR THE MULTI-SPEED DRIVE.

INDUSTRIAL MAGZA® DIST. AUTORIZADO MEX (55) 53 63 23 31 MTY (81) 83 54 10 18 QRO (442) 1 95 72 60 ventas@industrialmagza.com

Section 8
CLEANING, INSPECTION AND GENERAL REPAIR INFORMATION

WARNING:
Petroleum based cleaning solvents are flammable and open flames or smoking by personnel in the vicinity of these solvents is extremely hazardous and must not be permitted.

8-1 CLEANING AND INSPECTION

Clean metal parts in a suitable solvent and dry in a stream of low pressure compressed air. The Clutch and Brake Drive Plates can be cleaned in a solvent, but DO NOT clean the Clutch and Brake Friction Discs in solvent. Use only a clean, dry and lint-free rag to clean these Friction Discs. (Solvent will damage the resilient paper-based friction material used on the Friction Discs). Keep the Drive Plates and Friction Discs in the same order as they were removed. After cleaning, inspect parts for cracks, distortion, scoring, nicks, burrs or other damage would affect serviceability. Pay particular attention to the following:

1. Check the disc wear surfaces for scoring, galling or evidence of uneven wear.
2. Check the clutch and brake plates for scoring or galling. Make sure they are flat. If a perceptible ridge is worn in any of the drive plates, replace all of the drive plates and friction discs as a complete set.
3. Carefully check the piston and bore surfaces for nicks, scratches, scoring or other damage which would affect operation or cause leakage.
4. Pay particular attention to the shafts in the area of rotary oil seals. Check for nicks, scratches which would cause leakage. Replace any damaged parts.
5. It is not necessary to remove the ball bearings to check their operation. Slowly rotate the free race of each bearing by hand checking to see if it turns freely without rough or flat spots.

8-2 GENERAL REPAIR INFORMATION

A fine stone or crocus cloth may be used to remove minor surface defects from parts so long as the operating or sealing action of the part is not affected. The use of coarser abrasives or other machining methods should not be attempted. Otherwise, damaged parts should be
replaced.

Replacement is recommended also for the following, as applicable:

1. Replace all O-Rings, liners, gaskets, springs and oil seals removed during the course of disassembly.
2. Replace clutch or brake discs and drive plates in complete sets only.

INDUSTRIAL MAGZA® DIST. AUTORIZADO MEX (55) 53 63 23 31 MTY (81) 83 54 10 18 QRO (442) 1 95 72 60 ventas@industrialmagza.com

Section 9
REASSEMBLY

9-1 GENERAL REASSEMBLY INSTRUCTIONS

1. Lubricate O-Rings and the lip of all Oil Seals with the same oil as used in the drive unit immediately before reassembly and installation of any mating parts.
2. Outside diameter sealing Teflon Liners will be easier to install if they are heated in a oven to 200” F. maximum.
3. The installation of press-fitted parts can be eased by heating the outside parts in an oven. Heat Bearings to 250” F. maximum.

CAUTION
Wear suitable gloves when handling heated parts.

4. Place a light coating of **Gasket Sealant (Permatex #3D)** in the bore for all Oil Seals immediately before pressing them into the bore.

REASSEMBLY OF MAJOR SUB-ASSEMBLIES

The Reassembly Procedure is basically just a reverse order of the Disassembly Procedure.

9-2 INSTALLING BEARINGS ON OUTPUT SHAFT

(See Figure 10.6)

1. Press Bearing (#35) onto the Output Shaft (#1) with an arbor press.

IMPORTANT
Outboard Bearing (#35) must be installed with the loading slots towards the output end of the shaft. *(See Figure 9.1)*

2 Screw Locknut (#34) onto the Output Shaft (#1). Use **Red (Locktite #271)** on the threads.

3. Press Bearing (#28) onto the other end of the Output Shaft (#1).

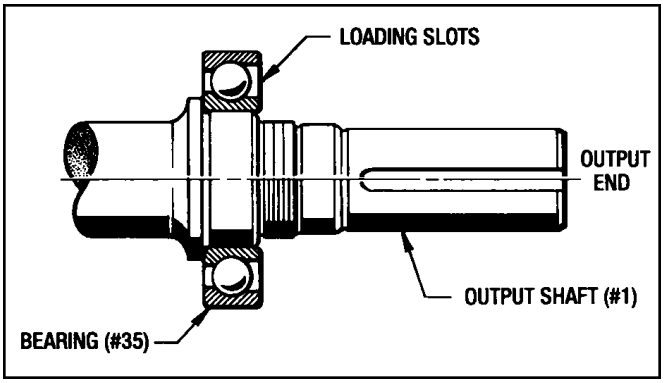

Figure 9.1 - Installing Bearing (#35) On Output Shaft

9-3 OUTPUT HOUSING SUB-ASSEMBLY

1. Guide the Output Shaft Sub-Assembly into the Output Housing (#9). *(See Figure 9.2)*

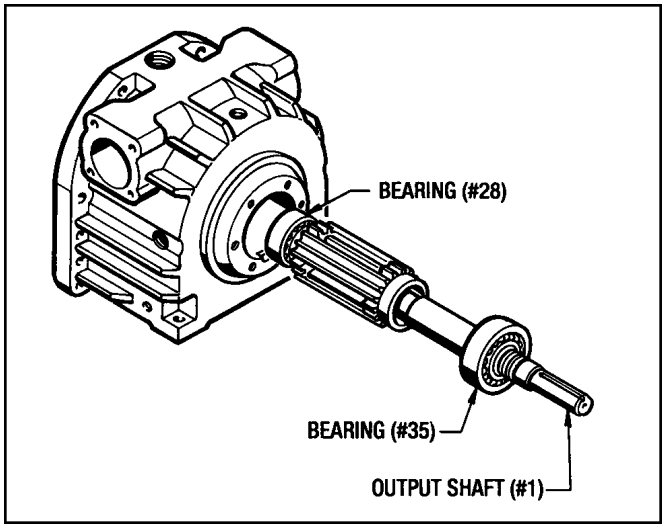

Figure 9.2 - Installing Output Shaft Sub-Assembly

2. Press the Oil Seal (#32) into the Bearing Retainer (#7). Use **Sealant (Permatex #3D)** on the seal bore. Clean off any excess Sealant.
3. Align Gasket (#55) onto the Bearing Retainer (#7).
4. Lubricate the lip of Oil Seal (#32) and the ground shaft diameter with Mobil Multi Purpose ATF. Slide the Bearing Retainer (#7) over the output shaft, being careful not to damage the oil seal lip.
5. Attach Bearing Retainer (#7) with (6) Screws (#63) and (6) Washers (#126).

9-4 WORM GEAR SUB-ASSEMBLY

(See Figure 10.6)

1. Press the Bearing (#41) onto the Secondary Input Shaft (#192), making sure that the bearing seats on the input shaft shoulder.
2. Install Key (#182) and the Worm Gear (#154) onto the Secondary Input Shaft. (The Worm Gear will have to be pressed onto the input shaft.)
3. Install Spacer (#49) on the Secondary Input Shaft.
4. Next press Bearing (#27) on the Secondary Input Shaft (#192).
5. Install the Secondary Input Shaft Sub-Assembly into the housing.
6. Determine the thickness required for Shim (#292). *(See Figure 9.3)*

INDUSTRIAL MAGZA® DIST. AUTORIZADO MEX (55) 53 63 23 31 MTY (81) 83 54 10 18 QRO (442) 1 95 72 60 ventas@industrialmagza.com

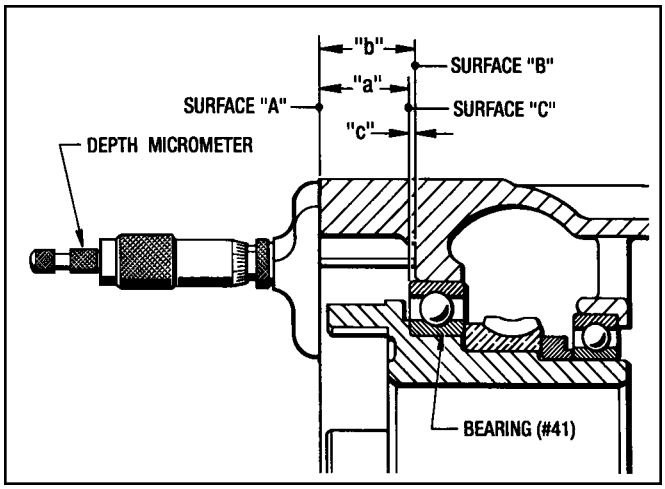

Figure 9.3 - Determining Thickness of Shim (#292)

(a) Using a depth micrometer, take a reading from surface **"A"** to surface **"B"**. This is dimension ***"a"***.

(b) With the depth micrometer, take a reading from surface **"A"** to bearing surface **"C"**. This is dimension ***"b"***.

(c) Subtract ***"a"*** from ***"b"*** to get ***"c" ("a" - "b" = "c").***

(d) Amount of shims required = ***"c"***.

7. Align the Shims (#292) onto the Housing.
8. Attach Bearing Retainer(#162) with (6) Screws (#159) and (6) Washers (#128).

9-5 SECONDARY INPUT HOUSING SUB-ASSEMBLY *(See Figure 10.5 and 10.7)*

(WITH MALE INPUT WORM SHAFT)

1. Press the Bearing Cone (#168) onto the drive end of the Worm Shaft (#153).
2. Insert the Worm Shaft and the Bearing Cone (#168) into the bearing bore of the Secondary Input Housing (#9).

   Manually raise the Worm Shaft to the top of the bearing bores to give the necessary clearance over the Worm Gear (#154).*(See Figure 9.4)*
3. Heat the other Bearing Cone (#168) and slide it onto the Worm Shaft (#153).
4. Slide both Bearing Cups (#167) into the bearing bores.
5. Place Bearing Spacer (#23) over the shaft end up against the Bearing Cup (#167) on the brake side.
6. Slide the Collet Spacer (#677) over the brake end of the Worm Shaft (#153).Then slide the Collet (#606) onto the worm shaft.

   CAUTION DO NOT USE MOLYBDENUM DISULFIDE "MOLYKOTE" OR ANY OTHER SIMILAR LUBRICANT ON THE SHAFT. The collet hub locking element is keyless and depends on friction to transmit torque from the brake to the shaft.
7. Install the Hub (#602) over the Collet (#606). Reinstall the Hex Hd. Cap Screw (#651) and Copper Gasket (#630). Use **Red Loctite #271** on the threads. **Tighten to 60 Lb. Ft. torque**.
8. Press Oil Seal (#631) into Brake Mounting Plate (#678) Use **Sealant (Permatex #3D)** in the seal bore.
9. Align Gasket (#623) on the Brake Mounting Plate (#678).
10. Attach the Brake Mounting Plate (#678) to the Secondary Input Housing (#9) with (4) Screws (#199) and (4) Washers (#627). Be careful not to damage the oil seal lip on the hub spline.
11. On the Drive Side, press Oil Seal (#158) into Brg. Retainer or C-Face Adapter(#155). Use **Sealant (Permatex #3D)** on the seal bore.

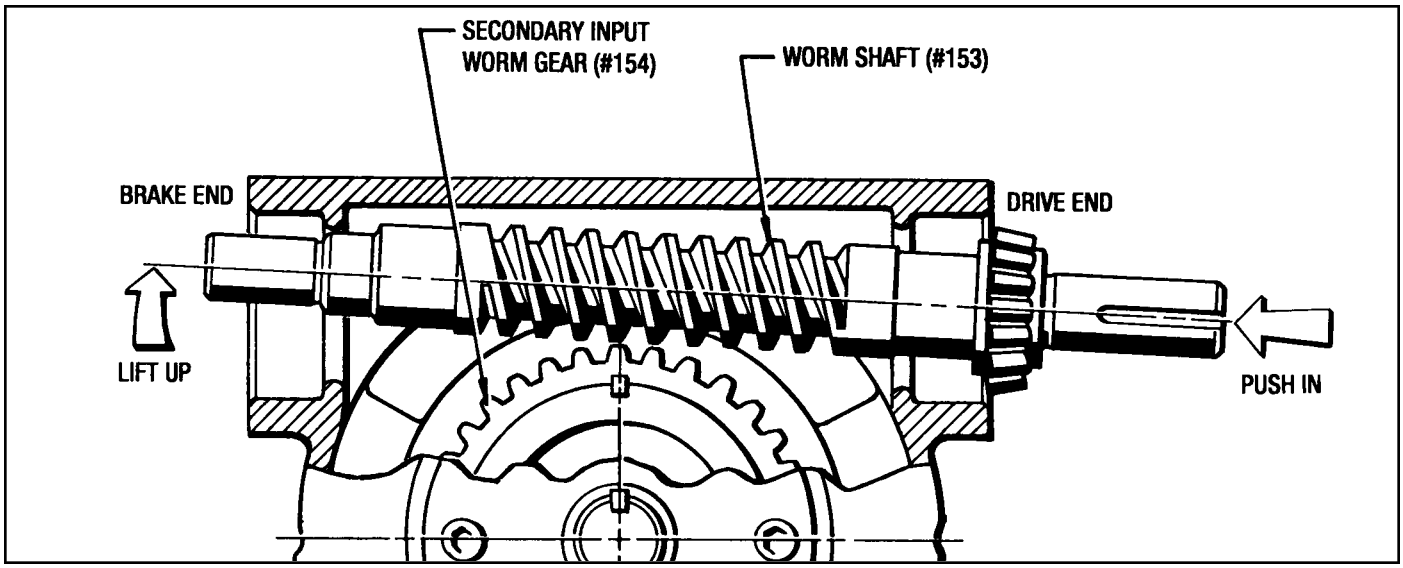

Figure 9.4 - Installing Male Worm Shaft

INDUSTRIAL MAGZA® DIST. AUTORIZADO MEX (55) 53 63 23 31 MTY (81) 83 54 10 18 QRO (442) 1 95 72 60 ventas@industrialmagza.com

12. Slide the Retainer or Adapter(#155) over the Worm Shaft (#153), being careful not to damage the lip of Oil Seal(#158).
13. Use (4) Screws (#199) and (4) Washers (#175) or (#202) to attach to the housing.
14. Use a Feeler Gauge to check the gap between the Brg. Retainer or Adapter and the Housing.
15. Determine the thickness of Shims (#293) required by using the feeler gauge thickness + 0.005” thickness.
16. Remove the Brg. Retainer or Adapter (#155) and place Shims (#293) between them and the Housing.
17. Replace the Brg. Retainer or C-Face Adapter (#155) and attaching Screws and Washers.
18. Replace Key (#166) back into the Worm Shaft (#153).

9-6 SECONDARY INPUT HOUSING SUB-ASSEMBLY *(See Figure 10.5 and 10.7)*

(WITH QUILL INPUT WORM SHAFT)

1. Insert the brake end of the Quill Worm Shaft (#153) into the Secondary Input Housing (#9). (Manually lift the shaft when inserting it to clear the Worm Gear (#154). *(See Figure 9.5)*
2. Slide the worm shaft through the housing until the bearing shoulder of the worm shaft is visible past the housing. Heat the Bearing (#157) and slide it onto the shaft, making sure it seats against the bearing shoulder. *(See Figure 9.6)*
3. Slide the Worm Shaft and Bearing back into the housing until the bearing seats against the bearing bore shoulder.

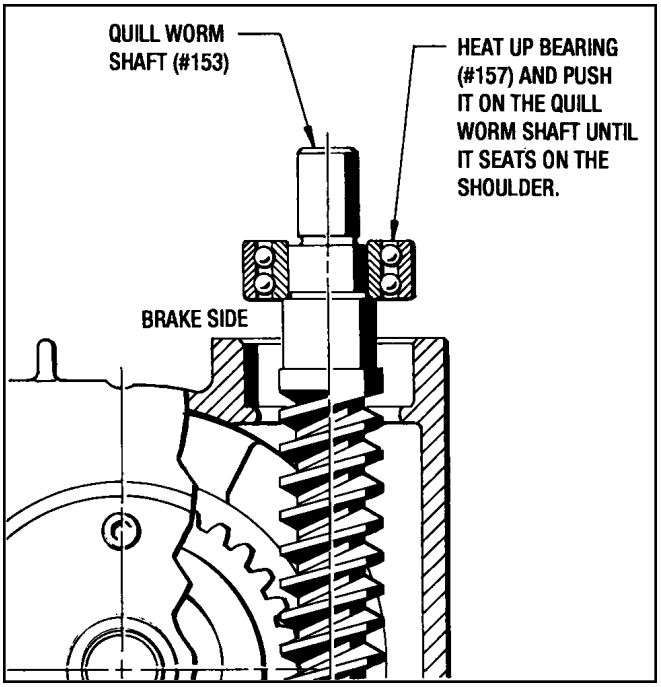

Figure 9.6 - Installing Bearing (#157) On Quill Worm Shaft

CAUTION
DO NOT USE MOLYBDENUM DISULFIDE “MOLYKOTE” OR ANY OTHER SIMILAR LUBRICANT ON THE SHAFT. The collet hub locking element is keyless and depends on friction to transmit torque from the brake to the shaft.

4. Press Oil Seal (#158) into C-Face Adapter (#155).Use **Sealant (Permatex #3D)** on the seal bore. Clean off any excess Sealant.
5. Slide the C-Face Adapter (#155) carefully over the worm shaft end. Do not damage the oil seal lip.

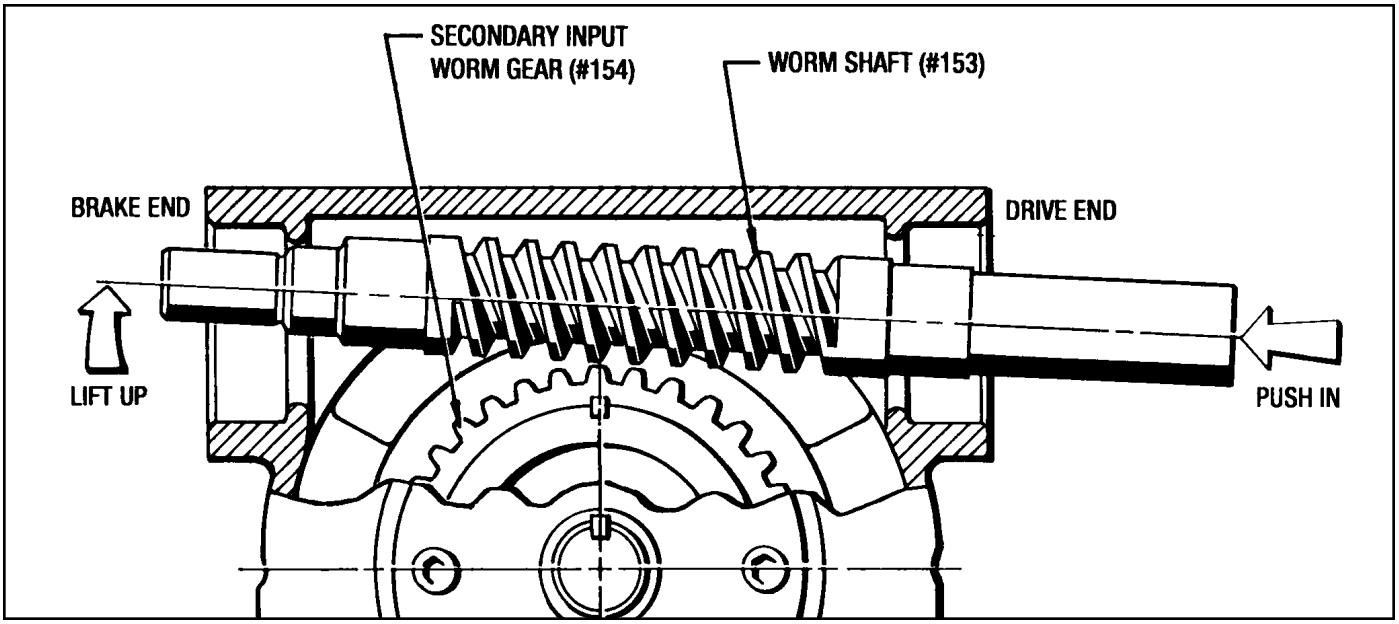

Figure 9.5 - Installing Quill Worm Shaft

INDUSTRIAL MAGZA® DIST. AUTORIZADO MEX (55) 53 63 23 31 MTY (81) 83 54 10 18 QRO (442) 1 95 72 60 ventas@industrialmagza.com

6. Attach the C-Face Adapter (#155) with (4) Screws (#199) and (4) Washers (#202).
7. Slide the Collet Spacer (#677) and then the Collet (#606) over the worm shaft end.
8. Place the Hub (#602) over the Collet. Re-install the Hex Hd. Cap Screw (#651) and Copper Gasket (#630) into the Hub and Collet. Use **Red Loctite #271** on the threads. Tighten to **60 Lb. Ft**. Torque.
9. Press Oil Seal (#631) into the Brake Mounting Plate (#678). Use **Sealant (Permatex #3D)** in the oil seal bore. Clean off any excess Sealant.
10. Align Gasket (#623) on the Brake Mounting Plate (#678).
11. Attach Plate (#678) to the Housing (#9) with (4) Screws (#1 99) and (4) Washers (#627). Be careful not to damage the lip of the oil seal on the worm shaft.

9-7 MB-056 BRAKE SUB-ASSEMBLY

(See Figure 10.1 and 10.5)

1. Place the Brake End Housing (#609) in an upright position to facilitate Reassembly as shown in *Figure 9.7*.
2. If necessary, press the Wear Sleeve (#676) into housing until it is flush with the "Thrust Face". Use **Red Loctite #271**.
3. Drive Pins (#657) into housing until they bottom out. Use **Red Loctite #271**.
4. Build up the Brake Stack using Friction Discs (#613) and Drive Plates (#612). See Page 38 for quantity of Drive Plates (#612), Friction discs (#613) and Springs (#636) noting the following:

   (a) Align the Drive Plates (#612) so that the Dowel Pins (#657) pass through the holes in the Drive Plates.

   (b) Center Friction Discs (#613) on the Drive Plates and align the spline teeth in the discs with each other.

   (c) Alternate between Drive Plates and Friction Discs, starting and ending with a Drive Plate.
5. Lubricate the (2) O-Rings (#640) and install them into the End Housing (#609).
6. Install the Teflon Liner (#642) into the housing.
7. Lubricate the (2) O-Rings (#639) and place them on the Piston (#603).
8. Stretch the Liner (#643) over the O-Rings on the Piston.
9. Lubricate the inside cylinder surface of the Brake End Housing.
10. Place Piston Sub-Assembly into the housing, aligning the (4) holes in the Piston with the (4) Pins (#657) in the Brake Stack. *(See Figure 9.7)*. Be careful not to damage the Teflon Liners in the housing or the piston.

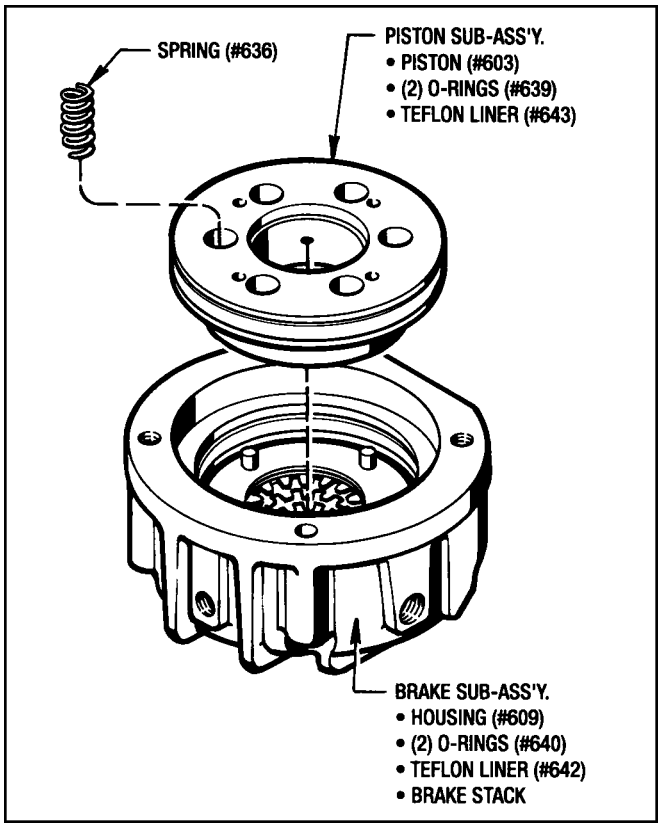

Figure 9.7 - Installing Piston Into Brake

11. Replace Springs (#636) back into the proper holes in the Piston (#603).
12. Place Gasket (#622) on the End Housing (#609) Use **Sealant (Permatex #3D)**.
13. Set the Adapter Plate (#679) onto the Brake Sub-Assembly. Attach with (2) Screws (#655) and (2) Washers (#628). Evenly tighten down these screws to compress the springs correctly.
14. Apply 60 P. S. I. air pressure to the Brake Port. (This port is labeled "Brake Port". Listen for air leaks and observe to see if the Brake Stack releases.
15. While air pressure is still applied to the Brake check and align the Friction Disc spline teeth with each other. Remove the air pressure.
16. Slide the Brake Assembly over the Hub (#602)

IMPORTANT

Do not force the Friction Discs over the hub. It may be necessary to realign them so the spline teeth are all in line with each other. The Brake will then slip on with ease.

INDUSTRIAL MAGZA® DIST. AUTORIZADO MEX (55) 53 63 23 31 MTY (81) 83 54 10 18 QRO (442) 1 95 72 60 ventas@industrialmagza.com

17. Attach Brake Assembly with (2) Screws (#652) and (2) Washers (#627).
18. Reinstall any pipe plugs and the Sight Gauge removed during Disassembly.

9-8 PISTON RETAINER AND HOUSING SUB-ASSEMBLY *(See Figure 10.4)*

NOTE:
Drive Units with "A" or "B" Logic will not have O-Ring (#39) and Liner (#42) in the Piston Retainer (#191).

IMPORTANT
Before applying Sealant (Loctite #620) to the Bearing (#27) O.D. and I.D. clean it well with cleaning solvent (Loctite #755) or equivalent.

1. Install the O-Rings (#39) and the Liners (#42) into the Piston Housing (#10) and Piston Retainer (#191). Lubricate the O-Rings before installation.
2. Apply **Sealant (Loctite #620)** to the I.D. of Bearing (#27) and press it onto the Thrust Plate (#5). Make sure that the bearing is firmly seated on the thrust plate shoulder.
3. Apply **Sealant (Loctite #620)** to the O.D. of Bearing (#27) and press the bearing and thrust plate into the Piston (#3). Make sure that the bearing is seated firmly against the piston shoulder.
4. Repeat steps 2 and 3 for the other Thrust Plate (#101) and Bearing (#27) Sub-Assembly.
5. Lubricate the (2) O-Rings (#40) and install them on the Piston (#3).
6. Heat up the Teflon Liner (#43) in an oven to 200" F. and place it on the Piston (#3).
7. Replace Springs (#36) back into the appropriate holes in the Piston Retainer (#191). Grease may be used to hold the springs in their holes during reassembly.
8. Inspect the Piston Sub-Assembly for an etched marking ***"OP"***. This designates the side of the Piston that should be placed down into the Piston Housing. Insert the Piston Sub-Assembly into the Piston Housing (#10). Be careful not to damage the Liners (#42 and #43) in the Piston Housing and Piston.
9. Align the Gasket (#51) on the Piston Housing using the Dowel Pins (#68) for proper positioning.
10. Assemble the Piston Retainer (#191) to the Piston Housing (#3) with (4) Screws (#62) and (4) Washers (#1 27).

IMPORTANT
When placing the Piston Retainer over the Piston, be careful not to damage the Teflon Liner (#42) in the Retainer.

Tighten down Screws (#62) in an even manner to compress the springs correctly.

9-9 PRIMARY INPUT HOUSING SUB-ASSEMBLY WITH MALE INPUT SHAFT

(See Figure 10.2)

1. Press Bearing (#38) onto the Input Shaft (#2).
2. Insert the Input Shaft into the Primary Input Housing(#8). *(See Figure 9.8)*

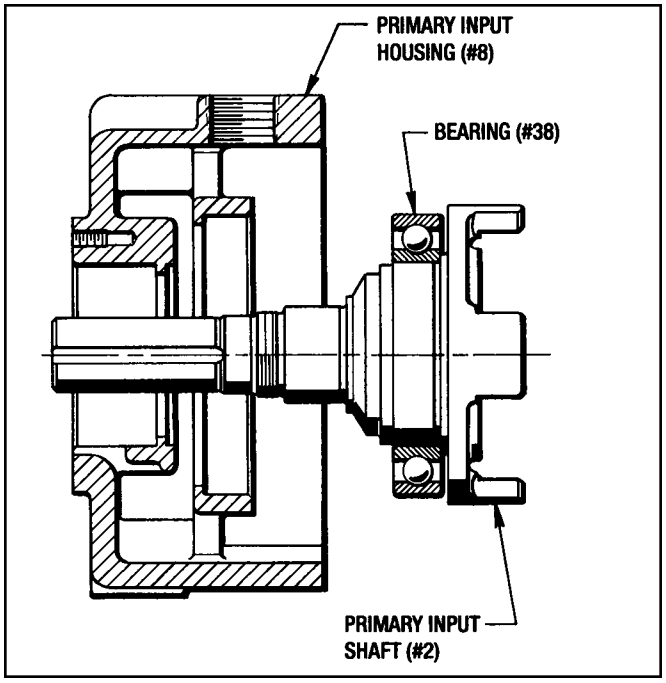

Figure 9.8 - Installing Primary Input Shaft

3. Set the Primary Input Shaft and Housing into an Arbor Press *(See Figure 9.9)*. Using an appropriate sized tube, press Bearing (#26) onto the Input Shaft until it bottoms out. Make sure the Loading Slots are towards the input end.

IMPORTANT
DO NOT press on the bearing cage or the outer race. Only press on the inner race of Bearing (#26).

4. Screw Locknut (#33) onto the Input Shaft (#2). Use **Red Loctite #271** on threads.
5. Apply a thin coat of **Sealant (Permatex #3D)** to the oil seal bore in the Bearing Retainer (#7) and press Oil Seal (#32) into the Retainer.
6. Place tape over the keyway and then slide the Bearing Retainer (#7) over the shaft, being careful

INDUSTRIAL MAGZA® DIST. AUTORIZADO MEX (55) 53 63 23 31 MTY (81) 83 54 10 18 QRO (442) 1 95 72 60 ventas@industrialmagza.com

not to damage the lip of the Oil Seal (#32). Attach with (4) Screws (#100).

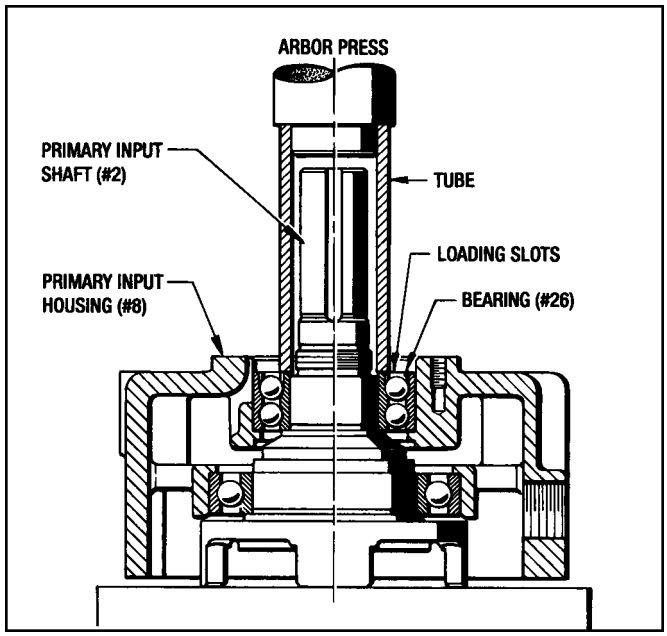

Figure 9.9 - Pressing Bearing (#26) On Primary Input Shaft

9-10 PRIMARY INPUT HOUSING SUB-ASSEMBLY WITH QUILL INPUT SHAFT

(See Figure 10.2)

1. Press the Bearing (#38) onto the Input Shaft (#2).
2. Lubricate and place the O-Ring (#104) into the input shaft bore. Press the Freeze Plug (#99) into the bore.
3. Insert the Quill Primary Input Shaft (#2) into the Primary Input Housing (#8). *(See Figure 9.8)*
4. Set the Primary Input Shaft and Housing into an arbor press. Using an appropriate sized tube, press Bearing (#26) onto the Input Shaft until it bottoms out. Make sure the Loading Slots are towards the input end. *(See Figure 9.9)*

IMPORTANT
DO NOT press on the bearing cage or the outer race. Only press on the inner race of Bearing (#26).

5. Screw Locknut (#33) onto the Input Shaft (#2). Use Red Loctite #271 on threads.
6. Apply a thin coat of **Sealant (Permatex #3D)** to the oil seal bore in the Bearing Retainer (#16) and press Oil Seal (#32) into the Retainer. Clean off any excess sealant.
7. Align Gasket (#56) onto the Bearing Retainer (#16).
8. Attach Bearing Retainer(#16) to the Housing (#8) with (6) Screws (#100). Be careful not to damage the lip of the Oil Seal (#32).
9. If the C-Face Adapter (#200) was removed, remount it back on the housing with (6) Screws (#201) and (6) Washers (#230).
10. Install Key (#180) back into the Input Shaft.

9-11 INSTALLING WATER COOLED HEAT EXCHANGER *(See Figure 10.3)*

1. Guide the Heat Exchanger (#48) into the Primary Input Housing, making sure that the tube ends project out the (2) holes in the back of the housing. Attach with (2) Screws (#56).
2. Mark the tubing approximately 1/16” beyond the face of the housing. *(See Figure 9.10)*

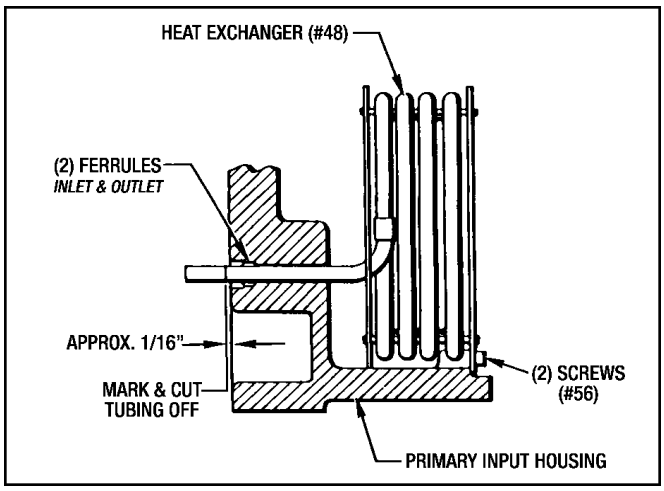

Figure 9.10 - Installing Heat Exchanger

3. Remove the Heat Exchanger from the Housing and cutoff the tubes on the 1/16” marks.

IMPORTANT
The ends of the tubes must be square and free of all burrs before reassembly.

4. Reinstall the Heat Exchanger back into the Housing and place the (2) Compression Fittings (#71) with ferrules on the tubing ends.
5. Add Pipe Coupling (#177), Pipe Nipple (#178), Pipe Tee (#242) and the Zinc Anode (#176) to the Inlet Fitting (#71).

9-12 REATTACHING MAJOR SUB-ASSEMBLIES AND CLUTCH STACKS

(See Figure 10.1)

1. Place the Output Housing so that the key end of the Output Shaft is down and the Housing is on a stable flat surface.
2. Install the Secondary Clutch Stack onto the Output Shaft spline. Start with (2) Drive Plates (#1 3) and then a Friction Disc(#12). Alternate the Drive Plates and Friction Discs, ending with a Friction Disc.

INDUSTRIAL MAGZA® DIST. AUTORIZADO MEX (55) 53 63 23 31 MTY (81) 83 54 10 18 QRO (442) 1 95 72 60 ventas@industrialmagza.com

Slide the Drive Plates over the lugs of the Secondary Input Shaft and the internal teeth of the Friction Discs with the Output Shaft spline.

3. Align the Gasket (#53) with the Output Housing, using the dowel pins for proper alignment.
4. Lower the Piston Retainer and Housing Sub-Assembly onto the Output Housing, aligning the Dowel Pins (#68) with the dowel pin holes, make sure that the Piston Housing (#10) is down towards the Output Housing. Press the Piston Housing down until the dowel pins engage the Output Housing. Check the Gasket (#53) to see if it is properly aligned.
5. Install the Primary Clutch Stack onto the Output Shaft Spline. Start with a Friction Disc (#12) and then a Drive Plate (#13), ending with a Drive Plate. Align the notches in the Drive Plates with each other and the internal teeth of the Friction Discs with the spline on the Output Shaft.
6. Align Gasket (#53) onto the Piston Retainer (f1), using the dowel pins for proper alignment.
7. Lower the Primary Input Housing Sub-Assembly down onto the Piston Retainer aligning the lugs on the Input Shaft with the notches in the Drive Plates. (Be sure you do not bend the Drive Plates (#13).

   Press the Input Housing down until the Dowel Pins (#68) engage the Piston Retainer Housing. Check Gasket (#53) to see if it is still aligned properly.
8. From the Input End, use (4) Screws (#61) and (4) Washers (#126) and from the Output End, use (8) Screws (#69) and (8) Washers (#126) to attach the units together. Use **Red Loctite #271** on the threads.
9. If your Drive Unit has a Male Input Shaft and is not equipped with Fan Cooling, then replace the Key (#180) into the Input Shaft.
10. Set the Drive Unit back in a horizontal position on the mounting feet.

This completes the Reassembly Procedure for the Major Sub-Assemblies. Before proceeding any further, an Operational Check of the unit should be made. Apply 60 to 80 PSI to the Clutch and Brake Ports, as indicated in Section 5 - OPERATIONAL CHECKS and observe the piston movement through the inspection ports.

9-13 FAN AND FAN SHROUD INSTALLATION

(See Figure 10.3)

1. Install Key (#37) into the Primary Input Shaft (#1).
2. Place Fan (#25) on the Input Shaft and tighten Set Screw (#70)
3. Place the Fan Shroud (#24) into place and attach with (2) Screws (#66) from the front of the Shroud.
4. Install Key (#180).

9-14 ATTACHING C-FACE MOUNTED DRIVE MOTORS WITH QUILL INPUT SHAFT

(See Figures 10.2 and I0.7)

1. Apply a light coat of **Bostik "Never Seez" compound** to the entire inner bore of the Secondary Input Quill Shaft (#153) and Primary Input Quill Shaft (#2) to prevent Fretting Corrosion within the shafts.
2. With an appropriate soft sling and a lifting hook slide the motor shaft into the Quill Input Shaft, making sure that the key on the motor shaft aligns with the keyway in the Quill Shaft. Attach the Drive Motor with (4) Screws (#262) and (4) Lockwashers (#265).

CAUTION:
Be very careful not to bump the Input Shaft. This could damage the Bearings and Oil Seals.

9-15 ATTACHING C-FACE MOUNTED SECONDARY CLUTCH DRIVE MOTORS WITH COUPLING *(See Figures 9.11 and 10.7)*

1. Install Coupling Hub (#247) onto the Secondary Input Shaft (#153) and the other Coupling Hub (#249) onto the Drive Motor Shaft as shown in *Figure 9.11*. Tighten with set screws when properly positioned. Slip the Coupling Spider (#248) into one of the Couplings. Carefully align the two Coupling Hubs together and attach the Drive Motor with (4) Screws (#262) and (4) Washers (#265).

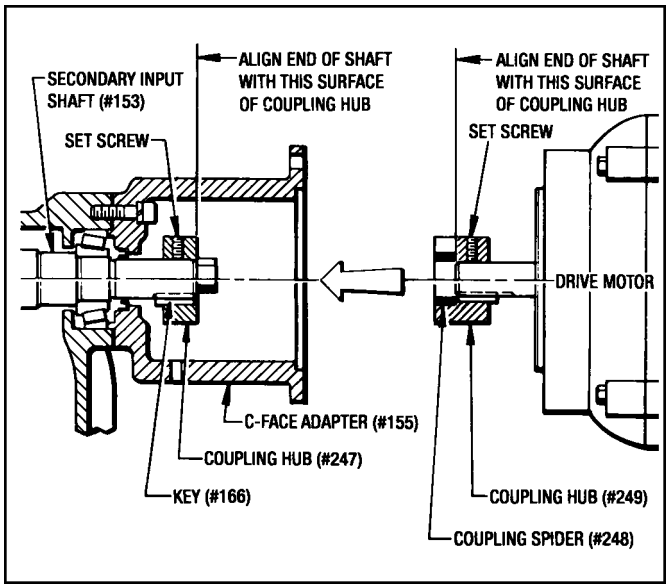

Figure 9.11 - Installing C-Face Motor With Coupling

INDUSTRIAL MAGZA® DIST. AUTORIZADO MEX (55) 53 63 23 31 MTY (81) 83 54 10 18 QRO (442) 1 95 72 60 ventas@industrialmagza.com

NOTE:
The Coupling Hubs (#247) and (#249) may have to be heated up to slip them on the appropriate shaft. Do not drive them onto the shafts. The Bearings could be damaged.

9-16 INSTALLING BELT DRIVEN SHEAVE OR PULLEY *(Male Input Shaft Only)*

1. Install guard back plate if necessary.
2. Assemble the Taper-Lock Bushing and the Drive Sheave or Pulley with the (2) Set Screws placed in the locking holes.
3. Place assembled Sheave or Pulley onto the Male Input Shaft as close as possible to the unit to minimize overhang shaft deflection. Tighten the (2) Set Screws to lock it on the shaft. *(See Figure 9.12)*

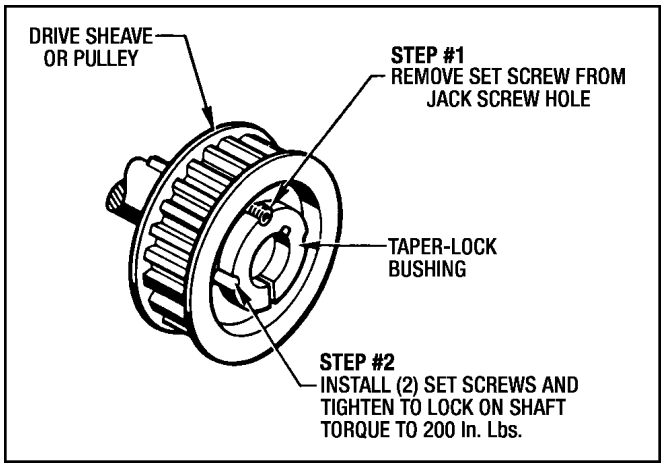

Figure 9.12 - Installing Sheave or Pulley

9-17 FINAL REASSEMBLY

1. Replace all pipe plugs and fittings removed for inspection or disassembly.
2. Fill the Drive Unit with Mobil Multi-Purpose (ATF) Automatic Transmission Fluid as indicated in Section 4 LUBRICATION
3. Replace all external motor drive parts, safety guards, sheaves, pulleys belts and couplings on belt drive units.
4. Before replacing the Drive Unit back into service, completely check out the Operation as described in Section 5 OPERATIONAL CHECKS.

INDUSTRIAL MAGZA® DIST. AUTORIZADO MEX (55) 53 63 23 31 MTY (81) 83 54 10 18 QRO (442) 1 95 72 60 ventas@industrialmagza.com

Section 10
ORDERING REPAIR PARTS

10-1 GENERAL INFORMATION

This section illustrates, lists and describes all available Repair Parts for the Force Control Multi-Speed Drive (MSDr). Exploded views with numbers are used to identify the various parts in the Drive Units. These numbers are listed in the parts list along with the part name and quantity used.

10-2 FACTORY RE-BUILD SERVICE

Re-conditioning service is offered by Force Control Industries at the factory. Before returning a unit for this service, be sure to first contact the Force Control Industries Service Sales Dept. for authorization and shipping instructions. Force Control Industries cannot be responsible for units returned to the factory without prior notice or authorization.

Care must be given to the packaging of returned drives. Always protect mounting feet by attaching to a skid. Shipment-damaged drives always delay repairs. When possible, describe the problem experienced on your shipping papers.

SHIPPING ADDRESS:

Force Control Industries, Inc.
3660 Dixie Highway
Fairfield, Ohio 45014

Telephone: (513) 868-0900
Fax: (513) 868-2105
E-Mail: info@forcecontrol.com

10-3 DRIVE MOTORS

The motors used with these Drive Units are standard and may be repaired or replaced by any qualified motor rebuild facility or supplier.

10-4 ORDERING REPAIR PARTS

When ordering replacement parts, please specify all of the following information:

1. Drive Model Number *(On the nameplate).*
2. Drive Serial Number *(On the nameplate).*
3. Part Reference Number. *(On the Exploded View Drawing and the Parts List.)*
4. Part Name. *(On the Parts List.)*
5. Quantity. *(On the Parts List.)*
6. Complete shipping Information.

Failure to include information for items 1 through 5 will only delay your parts order. Unless another method is specified for item 6, parts less than 70 pounds will be shipped United Parcel Service, parts over 70 pounds will be shipped motor freight. Air freight and other transportation services are available, but only if specified on your order.

10-5 NAME PLATE & MODEL NUMBER

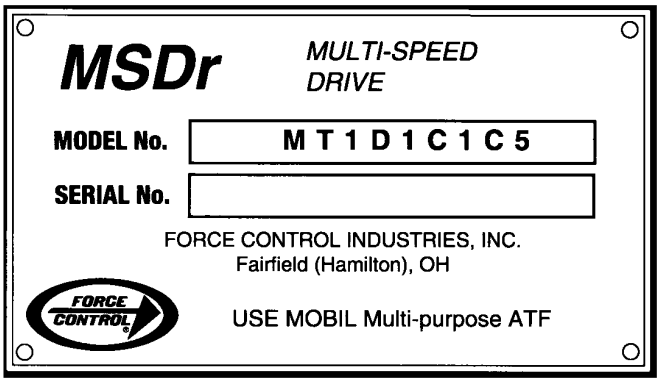

INDUSTRIAL MAGZA® DIST. AUTORIZADO MEX (55) 53 63 23 31 MTY (81) 83 54 10 18 QRO (442) 1 95 72 60 ventas@industrialmagza.com

MULTI-SPEED (MSDr) MODEL NUMBER

1	2	3	4	5	6	7	8	9
M	T							

SIZE (1,2)

M	T	= Size 2.5

PRIMARY INPUT (3)

1	= Standard	
2	= 4-1/2” AK, 5/8” U	C-Face
3	= 4-1/2” AK, 7/8” U	C-Face
4	= 8-1/2” AK, 1-1/8” U	C-Face
5	= 8-1/2” AK, 1-3/8” U	C-Face
7	= Piggyback	

LOGIC (4)

A	= A - Spring Set Brake 75/25
B	= B - Spring Set Brake 50/50
C	= C - Clutch Only
D	= SA - Spring Set Brake, Air Assist*
E	= SCP - Self Centering Piston

* Standard Logic

OUTPUT (5)

1	= Standard	
2	= 4-1/2” AK, 5/8” U	C-Face
3	= 4-1/2” AK, 7/8” U	C-Face
4	= 8-1/2” AK, 1-1/8” U	C-Face
5	= 8-1/2” AK, 1-3/8” U	C-Face
7	= Piggyback & 8-1/2” AK, 1-3/8” U	

REVISION (9)
(By Force Control)

SECONDARY INPUT (8)

A	= Standard	
B	= 4-1/2” AK, 5/8” U	C-Face with Quill Shaft
C	= 4-1/2” AK, 7/8” U	C-Face with Quill Shaft
D	= 8-1/2” AK, 1-1/8” U	C-Face with Quill Shaft
E	= 8-1/2” AK, 1-3/8” U	C-Face with Quill Shaft
F	= 4-1/2” AK, 5/8” U	C-Face with Coupling
G	= 4-1/2” AK, 7/8” U	C-Face with Coupling
H	= Piggyback	

COOLING (7)

1	= Std. (Radiant)
2	= Water
5	= Fan
7	= Fan, Split Shroud

RATIO (6)

A	= 6:1	G	= 30:1
B	= 12:1	H	= 40:1
C	= 15:1	I	= 48:1
E	= 20:1	J	= 60:1
F	= 24:1	K	= 96:1

NOTES:
1. U = Motor Shaft Diameter
2. AK = Motor Register Pilot Dia.

INDUSTRIAL MAGZA® DIST. AUTORIZADO MEX (55) 53 63 23 31 MTY (81) 83 54 10 18 QRO (442) 1 95 72 60 ventas@industrialmagza.com

Parts List For Figure 10.1

MAJOR SUB-ASSEMBLIES & CLUTCH STACKS

PART REF. No.	PART NAME	QTY.	PART REF. No.	PART NAME	QTY.
*12	Friction Disc	9	126	Lockwasher	10
*13	Drive Plate	10	*622	Gasket	1
*53	Gasket	2	627	Lockwasher	2
61	Soc. Hd. Cap Screw	4	652	Soc. Hd. Cap Screw	2
69	Soc. Hd. Cap Screw	6			

* - Indicates parts in Minor Overhaul Kit.

INDUSTRIAL MAGZA® DIST. AUTORIZADO MEX (55) 53 63 23 31 MTY (81) 83 54 10 18 QRO (442) 1 95 72 60 ventas@industrialmagza.com

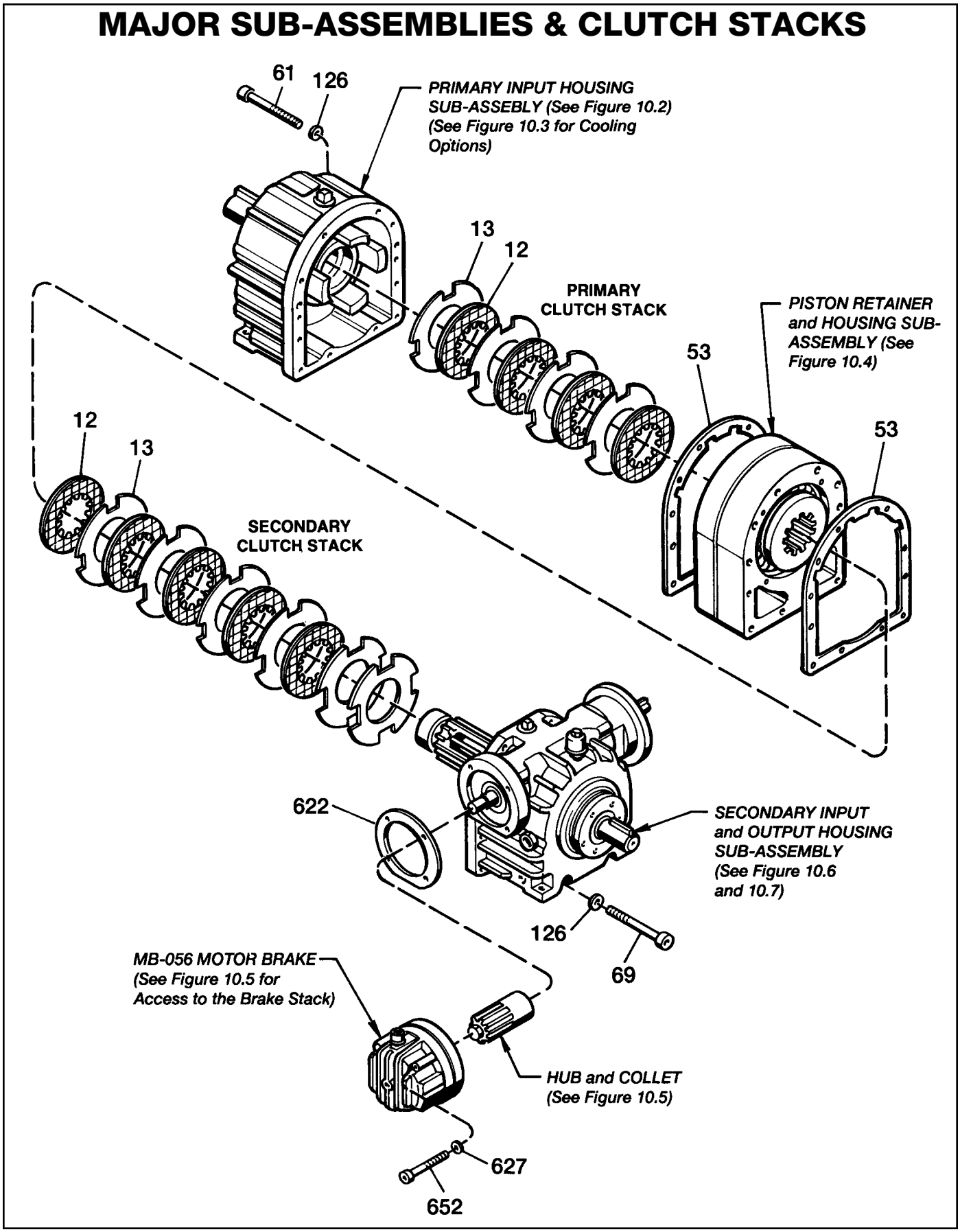

Figure 10.1 - Major Sub-Assemblies and Clutch Stacks

INDUSTRIAL MAGZA® DIST. AUTORIZADO MEX (55) 53 63 23 31 MTY (81) 83 54 10 18 QRO (442) 1 95 72 60 ventas@industrialmagza.com

Parts List For Figure 10.2

PRIMARY INPUT HOUSING SUB-ASSEMBLY

PART REF. No.	PART NAME	QTY.	PART REF. No.	PART NAME	QTY.
2	Input Shaft	1	*56	Gasket	1
7	Bearing Retainer	1	68	Dowel Pin	2
8	Input Housing	1	99	Plug	1
14	Pipe Plug, 1” NPT	1	100	Soc. Hd. Cap Screw	6
16	Bearing Retainer	1	*104	O-Ring	1
*26	Ball Bearing	1	180	Key	1
*32	Oil Seal	1	200	C-Face Adapter, Input	1
**33	Locknut	1	201	Soc. Hd. Cap Screw	6
*38	Ball Bearing	1	230	Lockwasher	6
*55	Gasket	1			

* - Indicates parts in Minor Overhaul Kit.

** - Indicates parts in Major Overhaul Kit. This Major Overhaul Kit also contains all parts that are in the Minor Overhaul Kit.

INDUSTRIAL MAGZA® DIST. AUTORIZADO MEX (55) 53 63 23 31 MTY (81) 83 54 10 18 QRO (442) 1 95 72 60 ventas@industrialmagza.com

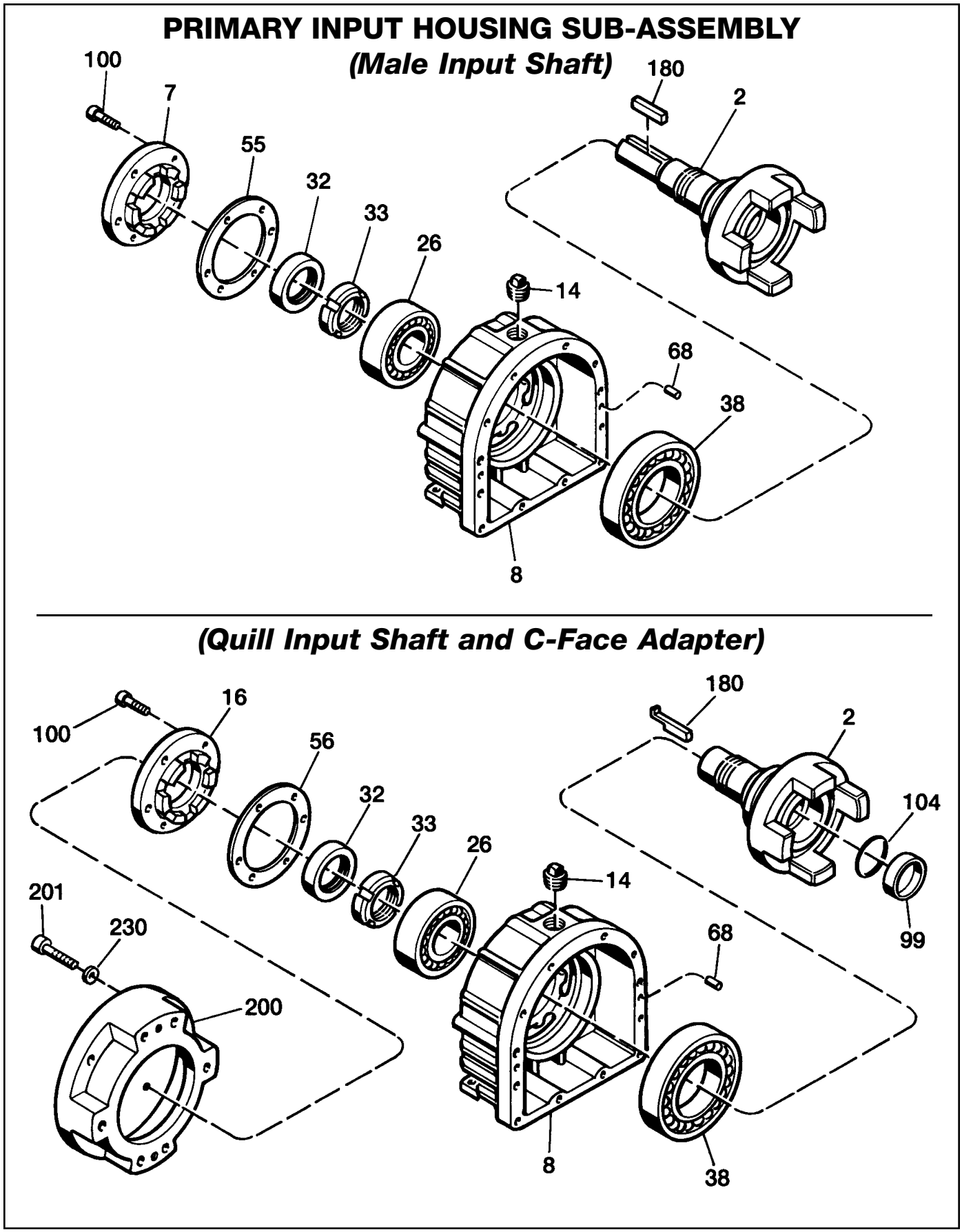

Figure 10.2 - Primary Input Housing Sub-Assembly

INDUSTRIAL MAGZA® DIST. AUTORIZADO MEX (55) 53 63 23 31 MTY (81) 83 54 10 18 QRO (442) 1 95 72 60 ventas@industrialmagza.com

Parts List For Figure 10.3

FAN COOLING AND WATER COOLING

PART REF. No.	PART NAME	QTY.	PART REF. No.	PART NAME	QTY.
24	Fan Shroud	1	71	Compression Fitting	2
25	Fan	1	152	Self Tapping Screw	4
37	Key	1	*176	Zinc Anode	1
48	Heat Exchanger	1	177	Pipe Coupling	1
56	Machine Screw	2	178	Pipe Nipple	1
66	Soc. Hd. Cap Screw	2	185	Access Cover	2
70	Set Screw	2	242	Pipe Tee	1

* - Indicates parts in Minor Overhaul Kit.

INDUSTRIAL MAGZA® DIST. AUTORIZADO MEX (55) 53 63 23 31 MTY (81) 83 54 10 18 QRO (442) 1 95 72 60 ventas@industrialmagza.com

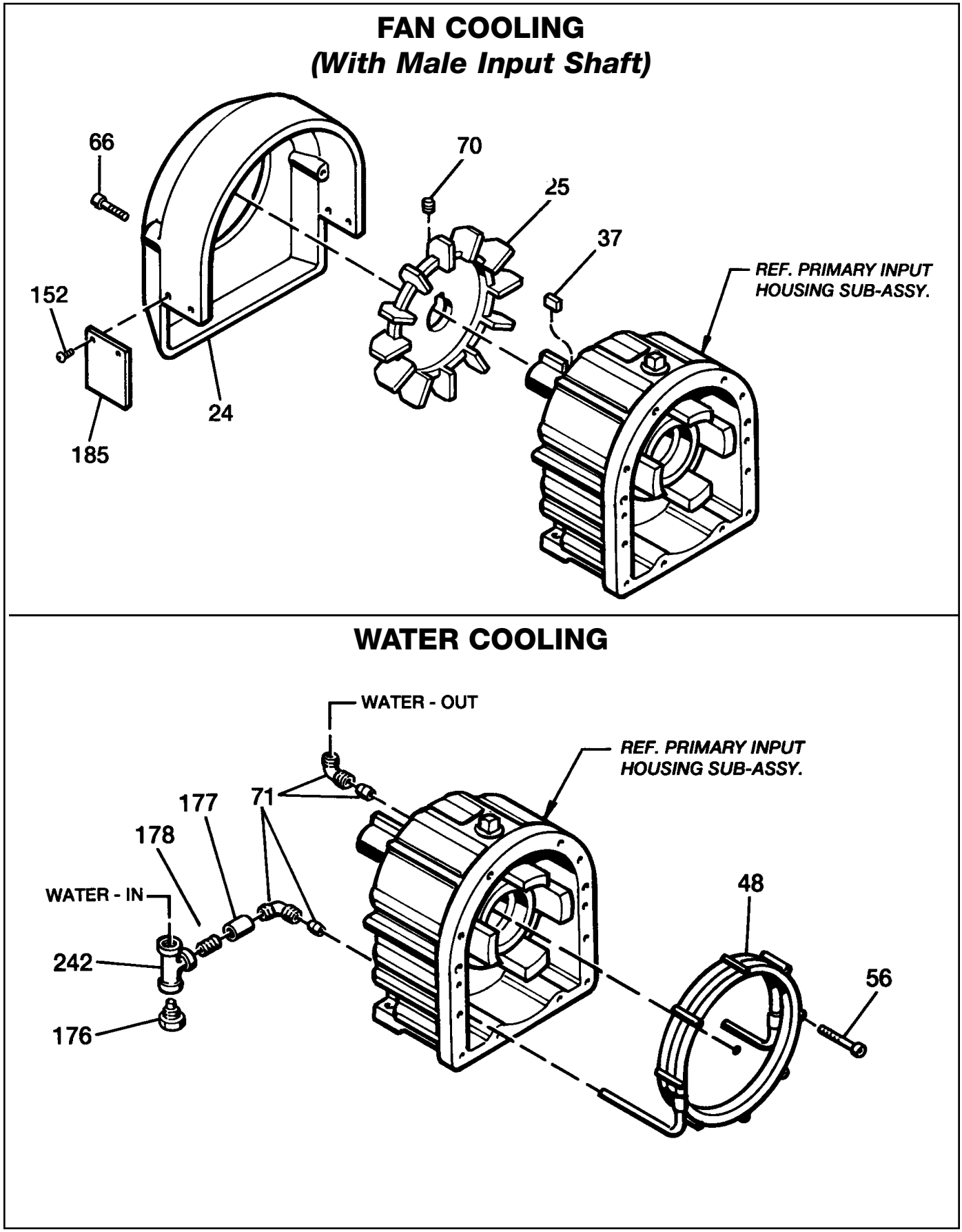

Figure 10.3 - Fan Cooling and Water Cooling

INDUSTRIAL MAGZA® DIST. AUTORIZADO MEX (55) 53 63 23 31 MTY (81) 83 54 10 18 QRO (442) 1 95 72 60 ventas@industrialmagza.com

Parts List For Figure 10.4

PISTON RETAINER & HOUSING SUB-ASSEMBLY

PART REF. No.	PART NAME	QTY.	PART REF. No.	PART NAME	QTY.
3	Piston	1	*40	O-Ring	2
**5	Clutch Thrust Plate	1	*42	Liner, I.D. Sealing	
10	Piston Housing	1		"A" and "B" Logic	1
*27	Ball Bearing	2		"C", "S" and "SA" Logic	2
*36	Spring		62	Soc. Hd. Cap Screw	4
	Logic "A"	9	*43	Liner, O.D. Sealing	1
	Logic "B"	18	*51	Gasket	1
	Logic "C"	4	**101	Clutch Thrust Plate	1
	Logic "S"	5	127	Lockwasher	4
	Logic "SA"	16	191	Piston Retainer	1
*39	O-Ring				
	"A" and "B" Logic	1			
	"C", "S" and "SA" Logic	2			

* - Indicates parts in Minor Overhaul Kit.
** - Indicates parts in Major Overhaul Kit. This Major Overhaul Kit also contains all parts that are in the Minor Overhaul Kit.

INDUSTRIAL MAGZA® DIST. AUTORIZADO MEX (55) 53 63 23 31 MTY (81) 83 54 10 18 QRO (442) 1 95 72 60 ventas@industrialmagza.com

PISTON RETAINER & HOUSING SUB-ASSEMBLY

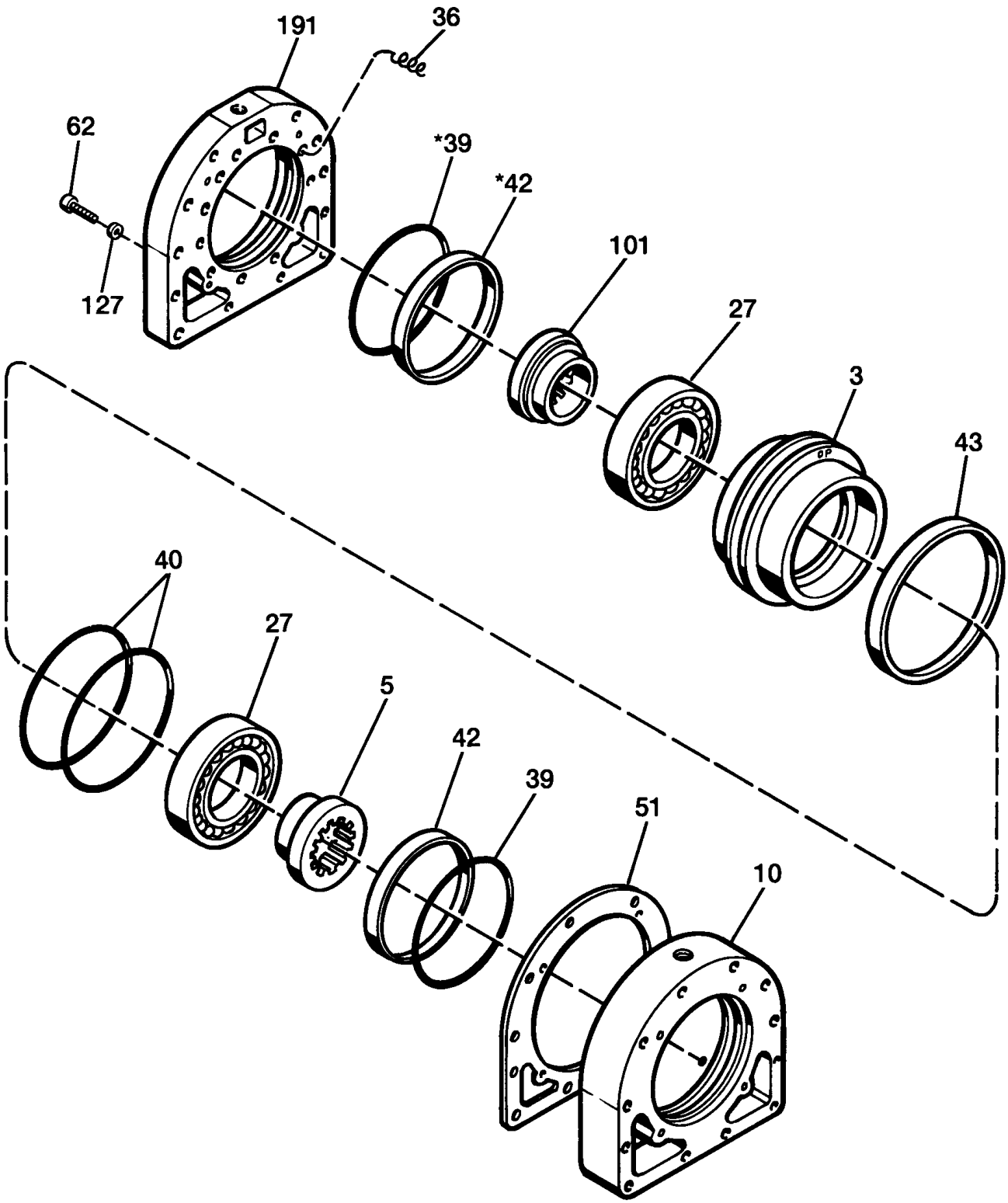

Figure 10.4 - Piston Retainer & Housing Sub-Assembly

INDUSTRIAL MAGZA® DIST. AUTORIZADO MEX (55) 53 63 23 31 MTY (81) 83 54 10 18 QRO (442) 1 95 72 60 ventas@industrialmagza.com

Parts List For Figure 10.5

MB-056 MOTOR BRAKE SUB-ASSEMBLY

PART REF. No.	PART NAME	QTY.	PART REF. No.	PART NAME	QTY.
602	Hub	1	*643	Liner, O.D. Sealing	1
603	Piston	1	**645	Breather	1
606	Collet	1	**646	Sight Gauge	1
609	End Housing	2	648	Pipe Plug, 1/4” NPT	1
*612	Drive Plate *(See Chart Below.)*	AR	649	Pipe Plug, 1/8” NPT	2
*613	Friction Disc *(See Chart Below.)*	AR	651	Hex. Hd. Cap Screw	1
*622	Gasket	1	653	Heli-Coil	2
628	Lockwasher	2	655	Soc. Hd. Cap Screw	2
630	Copper Gasket Washer	1	657	Dowel Pin	4
*636	Spring (See Chart Below.)	AR	674	Pipe Plug	2
*639	O-Ring	2	*676	Wear Sleeve	1
*640	O-Ring	2	679	Adapter Plate	1
*642	Liner, I.D. Sealing	1			

* - Indicates parts in Minor Overhaul Kit.

** - Indicates parts in Major Overhaul Kit. This Major Overhaul Kit also contains all parts that are in the Minor Overhaul Kit.

		QUANTITY REQ’D. OF FRICTION DISC (#613)			
		1	2	3	
QUANTITY REQUIRED OF SPRING (#636)	2	*2*	*4*	*6*	***STATIC BRAKING TORQUE*** *(Lb. Ft.)*
	3	*3*	*6*	*9*	
	4	*4*	*8*	*12**	
	6	*6*	*12*	*18*	
		8	6	4	
		QUANTITY REQ’D. OF DRIVE PLATE (#612)			

INDUSTRIAL MAGZA® DIST. AUTORIZADO MEX (55) 53 63 23 31 MTY (81) 83 54 10 18 QRO (442) 1 95 72 60 ventas@industrialmagza.com

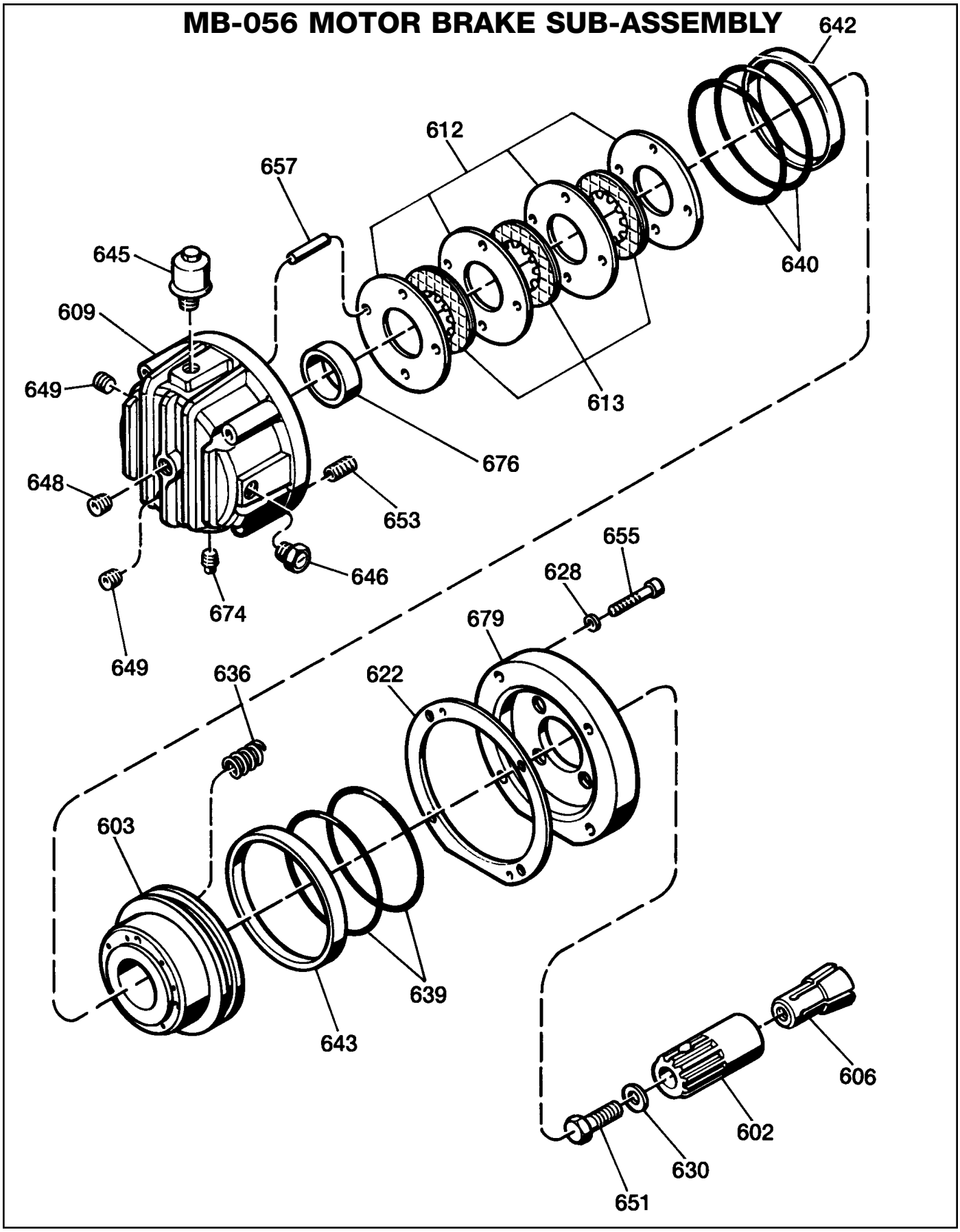

Figure 10.5 - MB-056 Motor Brake Sub-Assembly

INDUSTRIAL MAGZA® DIST. AUTORIZADO MEX (55) 53 63 23 31 MTY (81) 83 54 10 18 QRO (442) 1 95 72 60 ventas@industrialmagza.com

Parts List For Figure 10.6

SECONDARY INPUT & OUTPUT HOUSING SUB-ASSEMBLY

(Secondary Input & Output Shaft)

PART REF. No.	PART NAME	QTY.	PART REF. No.	PART NAME	QTY.
1	Output Shaft	1	68	Dowel Pin	2
7	Bearing Retainer	1	72	Pipe Plug, 1/2” NPT	1
9	Output Housing	1	73	Pipe Plug, 1/8” NPT	2
14	Pipe Plug, 1” NPT	1	126	Lockwasher	6
*27	Ball Bearing	1	128	Lockwasher	4
*28	Pilot Ball Bearing	1	154	Worm Gear	1
*32	Oil Seal	1	159	Soc. Hd. Cap Screw	4
**34	Locknut	1	162	Bearing Retainer	1
*35	Ball Bearing	1	181	Key	1
*41	Ball Bearing	1	182	Key	1
**45	Breather	1	192	Secondary Input Shaft	1
**46	Sight Gauge	1	198	Soc. Hd. Cap Screw	8
49	Spacer	1	203	Lockwasher	8
*55	Gasket, Bearing Retainer	1	209	C-Face Adapter	1
63	Soc. Hd. Cap Screw	6	*292	Shim	AR

* - Indicates parts in Minor Overhaul Kit.
** - Indicates parts in Major Overhaul Kit. This Major Overhaul Kit also contains all parts that are in the Minor Overhaul Kit.
AR - As Required.

INDUSTRIAL MAGZA® DIST. AUTORIZADO MEX (55) 53 63 23 31 MTY (81) 83 54 10 18 QRO (442) 1 95 72 60 ventas@industrialmagza.com

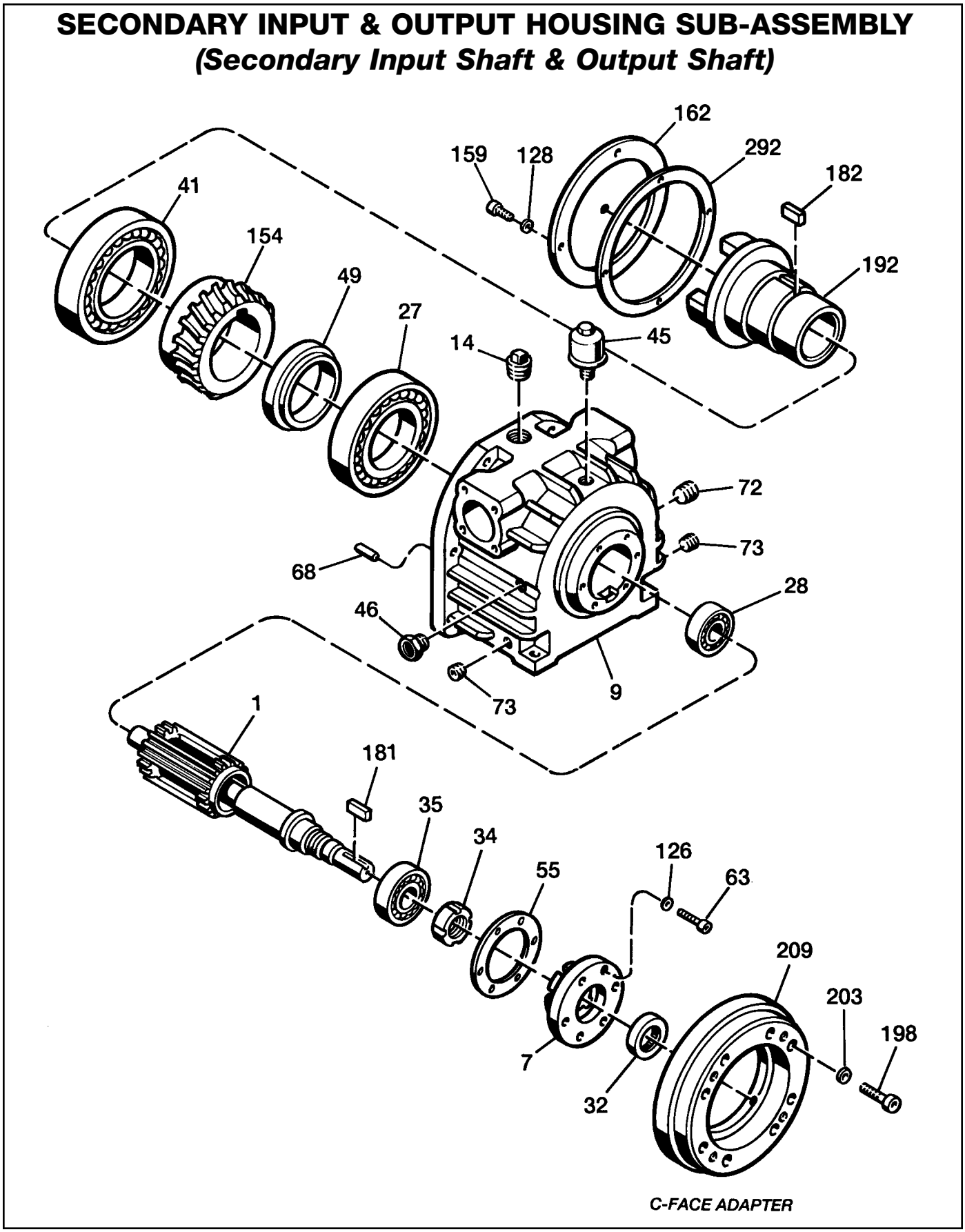

Figure 10.6 - Secondary Input & Output Housing Sub-Assembly (Secondary Input Shaft & Output Shaft)

INDUSTRIAL MAGZA® DIST. AUTORIZADO MEX (55) 53 63 23 31 MTY (81) 83 54 10 18 QRO (442) 1 95 72 60 ventas@industrialmagza.com

Parts List For Figure 10.7

SECONDARY INPUT & OUTPUT HOUSING SUB-ASSEMBLY

(Secondary Input Worm Shaft)

PART REF. No.	PART NAME	QTY.	PART REF. No.	PART NAME	QTY.
23	Bearing Spacer	1	247	Coupling, 1” Bore	1
153	Worm Shaft	1	248	Coupling Spider	1
155	Bearing Retainer	1	249	Coupling, .875” Bore	1
155	Extended C-Face Adapter *(With Coupling)*	1	262	Hex Hd. Cap Screw	4
156	Bearing Retainer *(With “C” Logic)*	1	265	Lockwasher	4
*157	Ball Bearing	1	*293	Shim *(Male Input Shaft Only)*	AR
*158	Oil Seal	1	*623	Gasket	
159	Screw *(With “C” Logic)*	4		Male Input Shaft	1
166	Key	1		Quill Input Shaft	2
*167	Roller Bearing Cup	2	627	Lockwasher	4
*168	Roller Bearing Cone	2	*631	Oil Seal	1
175	Lockwasher		656	Heli-Coil Insert	2
	“C” Logic Only (No Brake)	8	677	Spacer	1
	(With Brake)	4	678	Adapter Plate	1
199	Soc. Hd. Cap Screw	8	*913	Gasket *(“C” Logic Only)*	1
202	Lockwasher	4			

* - Indicates parts in Minor Overhaul Kit.
** - Indicates parts in Major Overhaul Kit. This Major Overhaul Kit also contains all parts that are in the Minor Overhaul Kit.
AR - As Required.

INDUSTRIAL MAGZA® DIST. AUTORIZADO MEX (55) 53 63 23 31 MTY (81) 83 54 10 18 QRO (442) 1 95 72 60 ventas@industrialmagza.com

SECONDARY INPUT & OUTPUT HOUSING SUB-ASSEMBLY

(Male Secondary Input Worm Shaft)

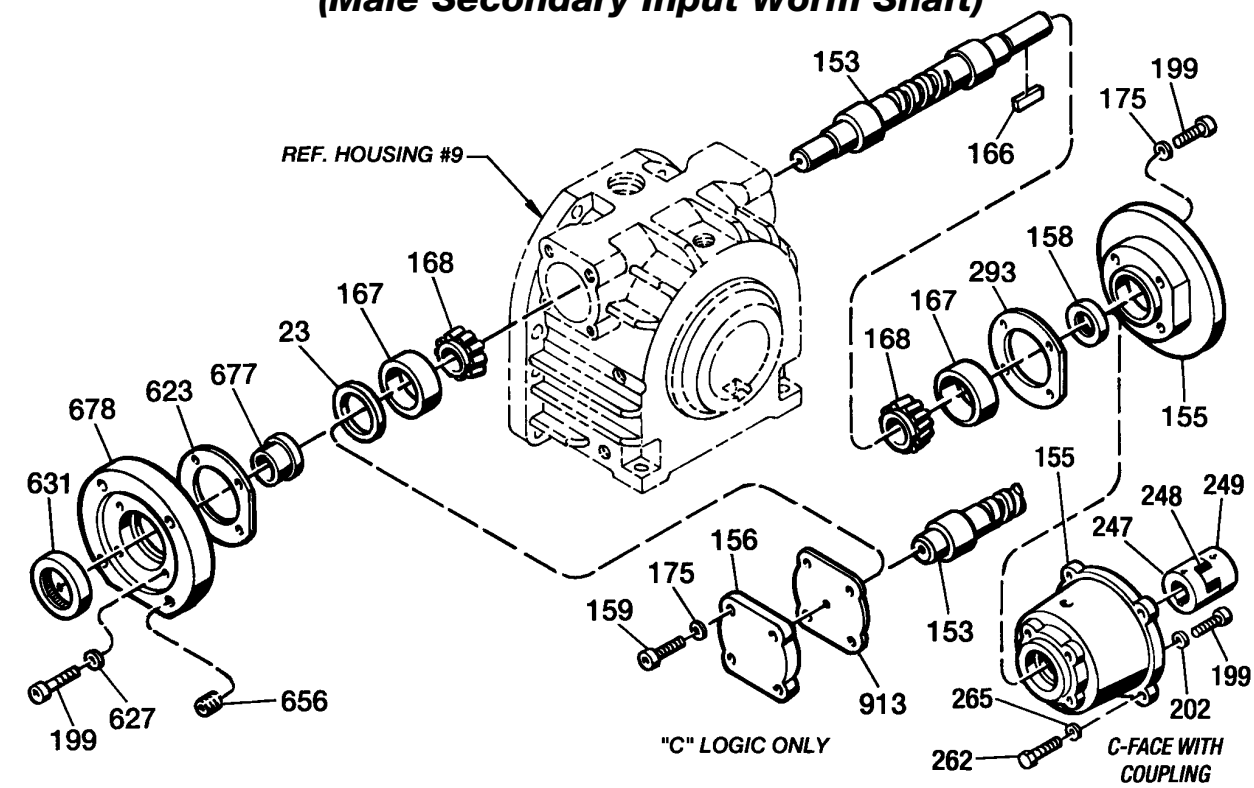

(Quill Secondary Input Worm Shaft)

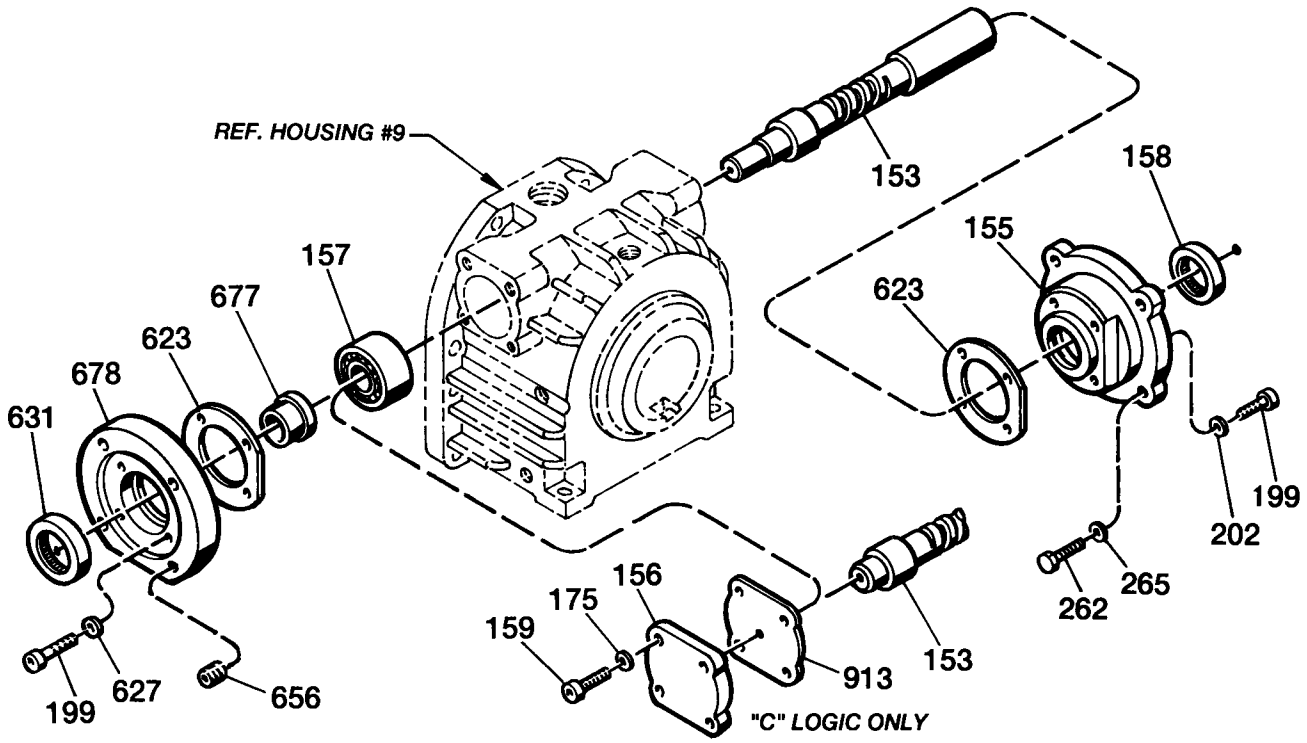

Figure 10.7 - Secondary Input & Output Housing Sub-Assembly (Secondary Input Worm Shaft)

INDUSTRIAL MAGZA® DIST. AUTORIZADO MEX (55) 53 63 23 31 MTY (81) 83 54 10 18 QRO (442) 1 95 72 60 ventas@industrialmagza.com

Manual Revision & Printing History

2.5 Posidyne Multi-Speed Drive (MSDr)

REVISION NUMBER	REVISION DATE *(Mo./Yr.)*	PRINTING DATE *(Mo./Yr.)*	REVISION/ACTION DESCRIPTION	REVISION INITIATED BY: *(Name)*	REVISION MADE BY: (Name)
502-MT-MS-01	8/03	--------	Created complete digital file to create a PDF file for the web. Updated manual format. New cover and back. Added Warranty information. Removed Detroit info. Added Revision History.	Brooks	Brooks

INDUSTRIAL MAGZA® DIST. AUTORIZADO MEX (55) 53 63 23 31 MTY (81) 83 54 10 18 QRO (442) 1 95 72 60 ventas@industrialmagza.com

FORCE CONTROL INDUSTRIES, INC.

Worldwide Leader in Oil Shear Technology.

Providing today's industries
with Oil Shear Clutch and
Brake Drives that delivers:
Flexibility • Efficiency
Endurance • Performance
Dependability

"Built to Last - Guaranteed to Perform"

FORCE CONTROL INDUSTRIES, INC.

MAIN OFFICE
P.O. Box 18366
Fairfield, Ohio 45018

3660 Dixie Highway
Fairfield, Ohio 45014

Tel: (513) 868-0900
Fax: (513) 868-2105

E-Mail: info@forcecontrol.com
Web Site: www.forcecontrol.com

INDUSTRIAL MAGZA® DIST. AUTORIZADO MEX (55) 53 63 23 31 MTY (81) 83 54 10 18 QRO (442) 1 95 72 60 ventas@industrialmagza.com